Music Computer

CX-5MU

SERVICE MANUAL

MSX

■ CONTENTS

Important Notice 1
Specifications 1
MSX Brief Description 3
Disassembly Procedures 10
Adjustments 11
LSI Data Table 12
IC Diagrams 18
Power Supply Unit Schematic Diagram 19
Power Supply Circuit Board 19
Wiring Diagram 20
Keyboard Matrix 21
Key Sub Circuit Board 21
U-Clock Card 21
CX-5MU Schematic Diagram 22
CPU Circuit Board 25
Block Diagram 26
Keyboard Layout 26
FM Sound Synthesizer Unit
Schematic Diagram 28
Timing Chart 30
FM Circuit Board 30
LSI Function 31
FM Sound Synthesizer Unit Address Map 31
LSI Data Table 32
Parts List 34

008040

SINCE 1887 YAMAHA
NIPPON GAKKI CO., LTD. HAMAMATSU, JAPAN
Printed in Japan '85.10

Scanned by Richard Atkinson
Converted to PDF by HansO, 2001

IMPORTANT NOTICE

This manual has been provided for the use of authorized Yamaha Retailers and their service personnel. It has been assumed that basic service procedures inherant to the industry, and more specifically Yamaha Products, are already known and understood by the users, and have therefore not been restated.

WARNING: Failure to follow appropriate service and safety procedures when servicing this product may result in personal injury, destruction of expensive components and failure of the product to perform as specified. For these reasons, we advise all Yamaha product owners that all service required should be performed by an authorized Yamaha Retailer or the appointed service representative.

IMPORTANT: The presentation or sale of this manual to any individual or firm does not constitute authorization, certification, recognition of any applicable technical capabilities, or establish a principle-agent relationship of any form.

The data provided is believed to be accurate and applicable to the unit(s) indicated on the cover. The research, engineering, and service departments of Yamaha are continually striving to improve Yamaha products. Modifications are, therefore, inevitable and changes in specification are subject to change without notice or obligation to retrofit. Should any discrepancy appear to exist, please contact the distributor's Service Division.

WARNING: Static discharges can destroy expensive components. Discharge any static electricity your body may have accumulated by grounding yourself to the ground buss in the unit (heavy gauge black wires connect to this buss).

IMPORTANT: Turn the unit OFF during disassembly and parts replacement. Recheck all work before you apply power to the unit.

■ Specifications

CPU

CPU:	Z80A compatible
Clock:	3.579545 MHz
Wait:	1 wait in M1 cycle
Interrupt:	INT external and VDP. NMI interrupt no used. (In MSX-BASIC interpreter 60Hz signal from VDP is used for the interrupt.) (MODE 1)
Reset:	Power on reset

MEMORY

Main memory:	32KB
Video RAM:	16KB
ROM:	32KB (MSX-BASIC)

VIDEO DISPLAY

Character set:	256 alphanumeric and graphic characters
Color:	16 colors
Text Display Capability:	24 lines by up to 40 columns (Software selectable)
Resolution:	256 dots X 192 lines (non-interlace)

INPUT AND OUTPUT

Keyboard:	Stroke type step sculpture keyboard. Special characters and Alphanumeric characters . . . . . 48 Control and special effect keys . 16 Cursor movement keys . . . . . 4 Function keys (programmable) . . 5 CAPS lock key with LED indication

Audio Cassette Interface: 8 pin DIN female connector
Baud rate 1200/2400 BPS switchable by software, FSK format
With remote control (Cassette motor ON/OFF)

Printer Interface: Standard Centronics 8-bit parallel
TTL logic level
14 pin female connector

Universal I/O Interface (JOYSTICK etc.): 2 ports
9 pin connectors (male) X 2
TTL logic level

Monitor Output: 1) 5 pin DIN female connector
2) NTSC composite video output
75 ohms ..... Use video cable (VC-02)
3) Sound output
8 octaves/3 notes + noise (–5dB)
The SSG is YM2149
Beep sound (PPI: μPD8225C-5)
4) Monitor output
Use monitor connector (RF-02)

Upper Slot (SLOT #1): 50 pin MSX standard female connector

Rear Slot (SLOT #2): 50 pin edge-card connector

FM sound synthesizer unit
60 pin edge-card connector
Number of Preset Voices: 46

Simultaneous Notes:
Up to 8 notes
Audio L/R Outputs:
–9 ± 2dB, 1.8kΩ
RCA-pin jacks
MIDI IN/OUT:
5 pin DIN female connectors
Music keyboard:
For connection to an optional YK-01 or YK-10 music keyboard.
20 pin male connector

POWER SUPPLY UNIT CAPACITY

+ 5V ± 5% 1.8A
+12V ± 10% 0.3A
–12V ± 10% 0.16A

GENERAL SPECIFICATIONS

Line Voltage: 120V AC (Minimum 90V, Maximum 132V)
Power Consumption: 30 watts maximum
Dimensions: 16.7" wide X 2.7" high X 8.2" deep (423mm wide X 68mm high X 208mm deep)
Weight: 7.7 pounds (3.5kg)

Accessory

Cassette interface cable
Computer side . . . . . 8 pin DIN male connector
Cassette recorder side
Mini-phone plug . . . . . Mini phone plug (3.5φ)
Mic plug . . . . . Mini phone plug (3.5φ)
Remote control plug . . . . . Mini phone plug (2.5φ)
Length: 1 m

- DISPLAY MODE

MODE		Resolution	Size	Number	Specified Color	Sprite	Characters
Graphic I (Screen 1)	MAX	256 X 192	8 X 8	256	16 colors	Yes	32 X 24
	NORMAL	240 X 192					29 X 24
Graphic II (Screen 2)	MAX	256 X 192	8 X 8	768	16 colors	Yes	32 X 24
	NORMAL	240 X 192					29 X 24
Multi-color (Screen 3)	MAX	64 X 40blk	4 X 4 per block	–	16 colors	No	8 X 6
	NORMAL	60 X 40blk					
Text (Screen 0)	MAX	256 X 192	6 X 8	256	2 out of 16 colors	No	40 X 29
	NORMAL	240 X 192					39 X 24

■ MSX Brief Description

CPU (Z80A)

A 10.73635 MHz clock is originated in the VDP and divided by three to produce a 3.579545 MHz system clock which is fed to the CPU. Thus one clock cycle is approximately 279nsec. Address bus (16 bits) and data bus connected to the peripheral devices and other external units.

One WAIT cycle is inserted per each M1 cycle (fetch instruction cycle). A WAIT cycle can also be inserted through slots #1 ~ #3.

As for the interrupt, NMI is not used, and the INT (interrupt) mode 1 is used. INT from VDP and external INT(s) from slots # 1 ~ # 3 are input to an OR gate and then fed to CPU INT line. 60 Hz interrupt signal is output from VDP to initiate each 1/60 of a second for the screen control or keyboard scan.

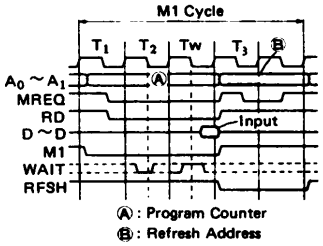

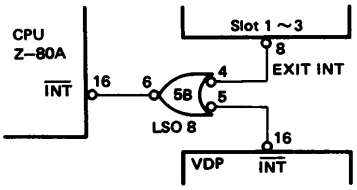

MMC (MSX Memory Controller -- YM5214)

This is a dedicated LSI for MSX, and was developed by Yamaha.

Based on the MSX specifications, the memory bank select uses standard I/O M1 WAIT instruction generation.

MMC BLOCK DIAGRAM

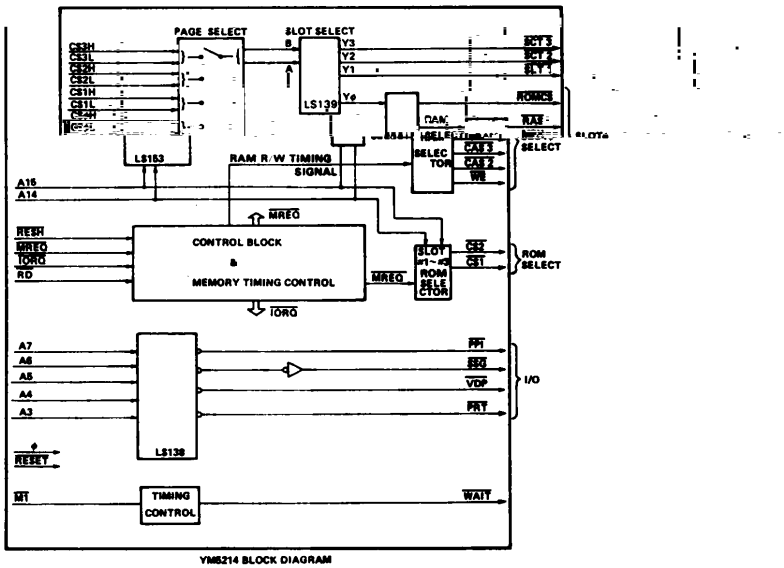

YM5214 BLOCK DIAGRAM

/DP (Video Display Processor – TMS9918A)
The VDP supports 16K bytes of V-RAM (Video RAM). It produces a composite video signal for a TV display according to he CPU instructions. A 10.738635 MHz clock generated within the VDP is divided by three to be used as a system clock or various peripherals.

SG (Software Sound Generator – YM2149)
The SSG is compatible to General Instrument's PSG (AY3-8910) and was enhanced, designed and developed by Yamaha. t can produce up to 3 notes and noise by software control. It also has two 8 bit universal I/O ports for joystick and other eripherals.

PI (Programmable Peripheral Interface – μPD8255A)
Three 8 bit universal I/O ports A, B and C are provided.
Each port may be controlled by software, and the following functions are assigned as a specification.
Port A: Memory bank signal output.
Port B: Keyboard scan signal input.
Port C: Keyboard strobe signal output, CAPS lock LED switch, cassette data recorder control, etc.

Memory map and slot

ROM: 32 byte MSX BASIC ROM on slot 0, address 0000H ~ 7FFFH.
RAM: DRAM (Dynamic RAM) of 16K bytes X 2 (total of 32K bytes) on slot 0, address 8000H ~ FFFFH.

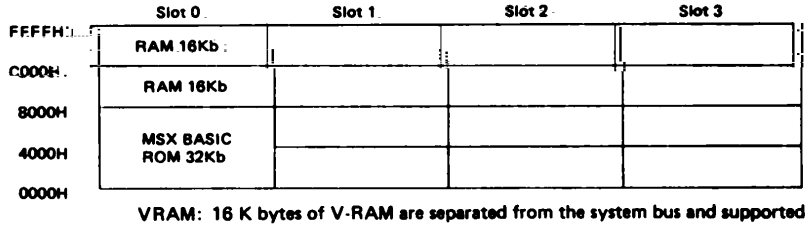

(Memory Map)

VRAM: 16 K bytes of V-RAM are separated from the system bus and supported by the VDP.

SLOT SELECT SIGNAL OF PPI PORT A

PPI-A8H-PORT

PPI PORT A				PORT A	
CS0	L	Specified bit to select 0000H ~ 3FFFH area from each SLOT		LSB	O
	H			bit 1	O
CS1	L	Specified bit to select 4000H ~ 7FFFH area from each SLOT		bit 2	O
	H			bit 3	O
CS2	L	Specified bit to select 8000H ~ BFFFH area from each SLOT		bit 4	O
	H			bit 5	O
CS3	L	Specified bit to select C000H ~ FFFFH area from each SLOT		bit 6	O
	H			MSB	O

MSX BASIC MODE

SLOT SPECIFICATION BY EACH CSX L, H (X = 0, 1, 2, 3)

L/H	0/0	1/0	0/1	1/1
Slot	ROM, RAM	Slot 1	Slot 2	Slot 3

- I/O port memory map

According to the MSX specifications, the 256 byte Z-80A I/O port area from 00H to FFH is reserved for the standard MSX system devices as follows:

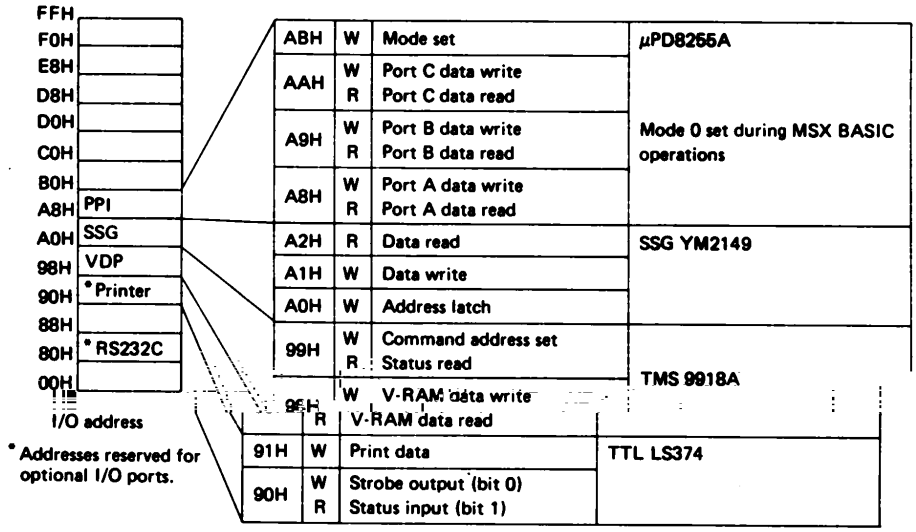

PPI input/output port

When MSX-BASIC is operating, the mode is set to MODE 0 (PA0 ~ PA7, PB0 ~ PB7 and PC0 ~ PC7 can be controlled as independent 8-bit ports) and each port controls the following input/output.

PA0 ~ PA7: Output port to MMC (sends out data to produce slot select signal).
PB0 ~ PB7: Input port for keyboard scanning data.
PC0 ~ PC3: Sends scanning signal to keyboard through an LS145 IC.
PC4: Motor ON/OFF control data recorder (cassette). Turns relay.
PC5: Output FSK specification data to data recorder (cassette).
PC6: LED lights at CAPS lock LED "L".
PC7: Emits beeping sound through 1 bit output.

SSG input/output port

This LSI can be programmed to play up to 3 notes as well as noise, and at the same time, controls the next input/output unit by means of the two input/output ports.

CHA ~ CHC : Triple chord output terminal and noise output terminal.
IOA0 ~ IOA5: Input port for general purpose. Input/output port (JOYSTICK 1, 2) data scanning.
IOA6: LED lights at CODE, locks LED "L"
IOA7: Input port for data from data recorder (cassette).
IOB0 ~ IOB6: General purpose input/output port (JOYSTICK 1, 2) select, and strobe & scanning.
IOB0 ~ IOB3: Port scanning data output
IOB4: JOYSTICK 1 strobe signal output
IOB5: JOYSTICK 2 strobe signal output
IOB6: JOYSTICK 1, 2 select signal
IOB "L" . . . . . JOYSTICK 1 select
IOB "H" . . . . . JOYSTICK 2 select
IOB7: Not used

The specified functions of the PPI and SSG input/output ports as described above are all set by the inner monitor when power ON reset and MSX-BASIC functions are in operation (without anything inserted in the slot).

27	A1	O	
28	A0	O	
29	A3	O	
30	A2	O	
31	A5	O	
32	A4	O	
33	D1	I/O	
34	D0	I/O	
35	D3	I/O	
36	D2	I/O	Data Bus signal
37	D5	I/O	
38	D4	I/O	
39	D7	I/O	
40	D6	I/O	
41	GND	–	Ground
42	CLOCK	O	System Clock 3.579545MHz
43	GND	–	Ground
44	SW13	–	System protection
45	+5	–	Power Supply +5V
46	SW2	–	System protection (Note: SW1 and SW2 are connected when a cartriged is inserted.)
47	+5	–	Power Supply +5V
48	+12	–	Power Supply +12V
49	SOUND IN	I	Sound input line (–5dBm) mixed with PSG sound and output
50	–12	–	Power Supply –12V

SLOT #3 (FM Sound Synthesizer Unit)

Pin No.	Pin Name	I/O	Description
1~10			Not used
11~60			Exactly same as 50-pin assignment as above.

•Slot management

Memory structure of MSX

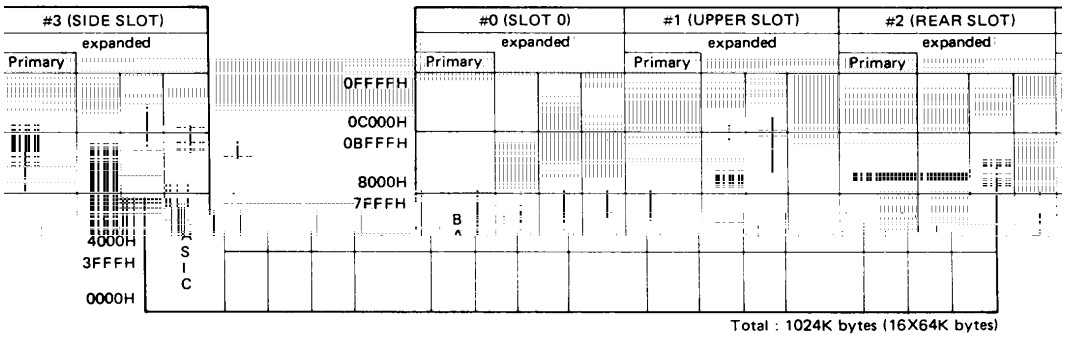

Terminology: Primary slot . . . . . Slot which is enabled by slot select register within 8255 PPI.
Secondary slot . . . . . Slot which is enabled by expansion slot register placed at 0FFFFH.
Page . . . . . Block of memory (maximum 16K) in each slot.
A slot is divided into 4 pages.
(0000H to 3FFFH, 4000H to 7FFFH, 8000H to 0BFFFH, 0C000H to 0FFFFH)

1. **Minimum configuration**
   a) Microsoft MSX BASIC interpreter at slot #0 from 0000H to 7FFFH.
   b) Minimum of 8K RAM from 0E000H to 0FFFH in any slot (including the secondary slot).

2. **RAM search procedure**
   MSX BASIC first searches for available RAM from 0BFFFH down to 8000H (including the ones in secondary slots), then enables the page containing the largest RAM. If there are more than one such pages, selects the leftmost page in the figure above. MSX BASIC next searches for available RAM from 0FFFFH down to 0C000H, and does the same thing described above. Finally, MSX BASIC searches for continuous RAM block from 0FFFFH down to 8000H and sets the system variable "BOTTOM".

3. **Program cartridge search procedure**
   MSX BASIC scans all slots (including secondary slots) from 4000H to 0BFFFH for a valid ID at the beginning of each page, collects information, and passes control to each page. The scan order is from left to right in the figure above. The format of ID and others are as follows.

Offset from top

+0000H	ID
+0002H	INIT
+0004H	STATEMENT
+0006H	DEVICE
+0008H	TEXT
+000AH	reserved
+0010H	

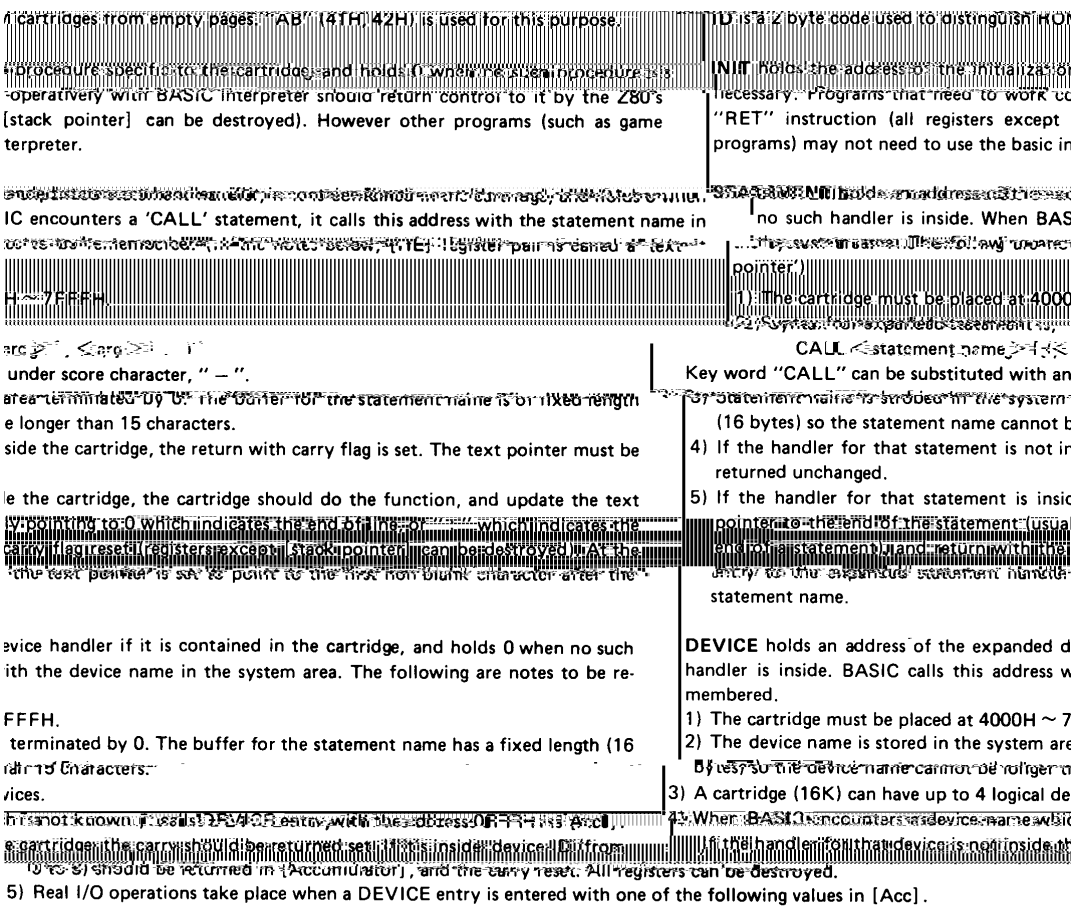

cartridges from empty pages. "AB" (41H, 42H) is used for this purpose.

procedure specific to the cartridge, and holds 0 when no such procedure is
-operatively with BASIC interpreter should return control to it by the Z80's
[stack pointer] can be destroyed). However other programs (such as game
terpreter.

IC encounters a 'CALL' statement, it calls this address with the statement name in

H ~ 7FFFH.

arc ≥ , <arg ≥ ,
under score character, " – ".
area terminated by 0. The buffer for the statement name is of fixed length
e longer than 15 characters.
side the cartridge, the return with carry flag is set. The text pointer must be

le the cartridge, the cartridge should do the function, and update the text
ly pointing to 0 which indicates the end of line or " " which indicates the
carry flag reset (registers except stack pointer can be destroyed). At the
the text pointer is set to point to the first non blank character after the

evice handler if it is contained in the cartridge, and holds 0 when no such
ith the device name in the system area. The following are notes to be re-

FFFH.
terminated by 0. The buffer for the statement name has a fixed length (16
ian 15 characters.
vices.
h is not known, it calls DEVICE entry with the address 0FFFH is [Acc].
e cartridge, the carry should be returned set if this inside device ID from
0 to 8) should be returned in [Accumulator], and the carry reset. All registers can be destroyed.

ID is a 2 byte code used to distinguish RO

INIT holds the address of the initializa
necessary. Programs that need to work c
"RET" instruction (all registers except
programs) may not need to use the basic in

no such handler is inside. When BAS
pointer')
1) The cartridge must be placed at 4000
2) Syntax for expanded statement is,
CALL <statement name> [<
Key word "CALL" can be substituted with an
3) Statement name is stroped in the system
(16 bytes) so the statement name cannot b
4) If the handler for that statement is not in
returned unchanged.
5) If the handler for that statement is insic
pointer to the end of the statement (usua
end of a statement), and return with the
entry to the expanded statement handle
statement name.

DEVICE holds an address of the expanded d
handler is inside. BASIC calls this address w
membered.
1) The cartridge must be placed at 4000H ~ 7
2) The device name is stored in the system are
bytes, so the device name cannot be longer t
3) A cartridge (16K) can have up to 4 logical de
4) When BASIC encounters a device name whic
If the handler for that device is not inside th

5) Real I/O operations take place when a DEVICE entry is entered with one of the following values in [Acc].

0	Open
2	Close
4	Random I/O
6	Sequential output
8	Sequential input
10	LOC function
12	LOF function
14	EOF function
16	FPOS function
18	Back up a character

Device ID is passed in the system variable "DEVICE".

ıch text is inside.
the program. The

TEXT holds the beginning address of BASIC. Text is contained in the cartridge, but holds 0 when no st
BASIC regards this as the beginning address of BASIC text, sets pointer there, and begins execution of
following are notes to be considered.

1) When there is more than one slot, only the leftmost one (in the figure of memory structure of MSX above) is enabled and executed.
2) The cartridge must be placed at 8000H ~ 0BFFFH, thus the maximum length of BASIC text cannot exceed 16 Kbytes.
3) Even if there is a RAM block equipped at 8000H ~ 0BFFFH, it can never be used.
4) The address pointed to by the TEXT entry must contain a zero.
5) The line numbers (for statements which reference line numbers, such as GOTO, GOSUB, etc.) must be translated to pointers in advance because they cannot be converted to pointers when executed. They can be line numbers, however the execution would become slower.

NOTE: INIT, STATEMENT, DEVICE and TEST are placed in the low order byte first.

- Operation of Cartridge Protection

The power supply circuit of this unit is a self start RC circuit type and specified secondary voltage is given by the feedback of PC-1 as shown to the figure. In the cartridge protector circuit, SW2 is shorted when the ROM cartridge is not inserted in the upper slot. For this reason, Q3 is non operating. When the cartridge is inserted, SW2 become open, Q3 is ON. In the result, the voltage supply stops. After that, when the cartridge is fully put in, Q3 turns OFF and power is supplied because pin 44 (SW21) and pin 46 (SW11) are shorted.

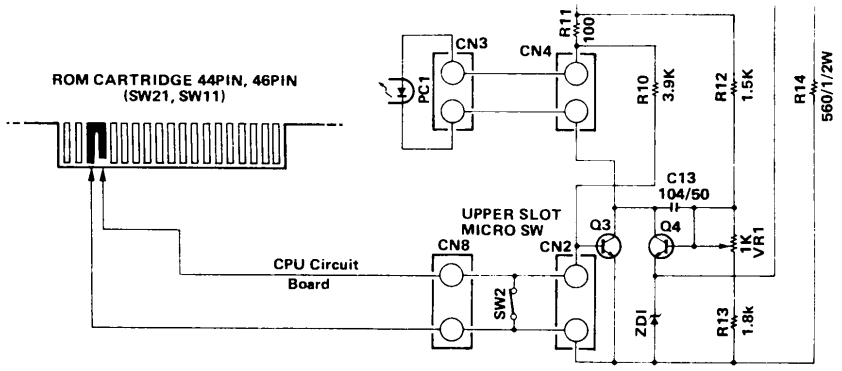

• Operation of Power Supply Unit

The following is the description and operation of the power supply circuit.

1. In power supply circuit, D4, C4 and R5 are the base drive circuits, and the base current of Q2 is determined by R5.
2. Q1 operates as a voltage controller and a cartridge protector.
3. The photocoupler (PC1) feeds the voltages fluctuation of +5V back to the control circuit through the error detection circuit at all times. The control circuit controls output based on the information fed back, by increasing and decreasing the base current of Q1 and changing the oscillating frequency of Q2.
4. VR1 connected to the base of Q4 in the error detection circuit adjusts the output voltage (+5V).
5. SW2 connected to Q3 in the cartridge protector circuit is ON at all times. Therefore, Q3 remains OFF normally.
6. When power is ON and the ROM cartridge is set in the upper slot erroneously, SW2 is turned OFF. Therefore, Q3 is turned ON, and the current flowing in the photocoupler (PC1) increases. The photocoupler (PC1) on the control circuit is turned ON to turn ON Q1. The oscillating frequency of Q2 increases, and the energy stored in L decreases, and output voltage lowers. When the ROM cartridge is properly set afterwards, pins 44 and 46 of ROM cartridge are short-circuited, and voltage increase again.
7. Overcurrent protection resistor R4:
   When excess current flows on the load side, current in proportion to it flows in Q2. At this time, R8 voltage also increases, which increases the base current of Q1 through R4. Consequently, the oscillating frequency of Q2 increases and output voltage is decreases. The oscillating frequency of Q2 is about 45 KHz.

■ Disassembly Procedures

• Case removal

1) Remove three screws from the bottom case. Refer to reference ①.
2) Lift the front end of the keyboard case and remove it. Disconnect the shield wire from the shield plate of the CPU at the right front and left side.
   Also, disconnect the keyboard cable to the CPU board by gently pulling it up.
3) Remove five screws (two long ones and three short ones) from the bottom case and lift the case to disconnect the connector from the upper slot.

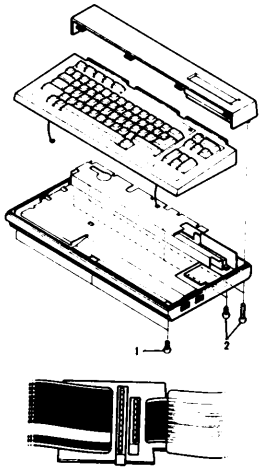

• CPU board removal

1) Remove the side slot screws from the bottom case and remove the FM sound synthesizer unit.
2) Remove seven screws securing the shield plate of the CPU board, move it to the right a little and lift it up.
3) Remove the side slot shield plate of the CPU board.
4) Remove the rear slot cover.
5) Remove CN2 (8 pin) from the CPU board.
6) Remove three screws from the CPU board and two screws from the upper slot connector.
7) Remove the CPU board by lifting its left side and pulling it to the left a little.

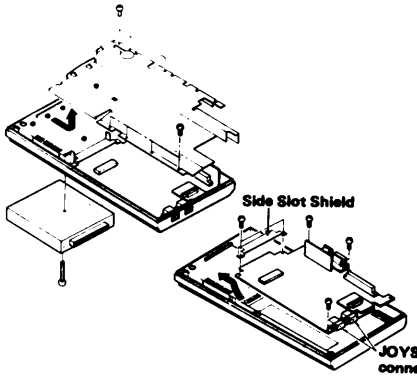

- **Power supply unit removal**

1) Remove two screws from the power supply unit. Remove the shield plate and power supply unit by lifting the right side of the shield plate and pulling it to the right a little.
2) Remove two screws from the cord stopper and remove the power supply unit.

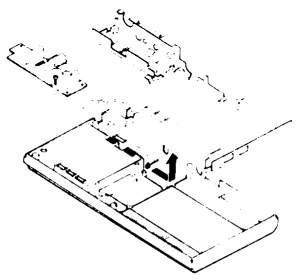

■ Adjustments

Adjustment	Equipment Required	Measure at	Adjust	Readings
+5V supply voltage	DVM (Digital voltmeter)	Pin #4 and 7 of connector CN2, CPU board	VR1, power supply	+5V ± 0.25V
Clock Frequency	Frequency counter	Pin # 6 of Z80A CPU	TC1, u-clock card	3.579545 MHz ± 50 Hz

NOTES: Check AC line voltage to insure that it is 120V ± 10%.
The adjustment for +5V supply voltage should be made while the circuitly of the CX-5MU is connected or the proper load resistor is terminated as shown below.
To terminate the load resistor, remove connector CN2 from the CPU board. Then if possible, insert one lead of the load resistor into pin 7 or 8 (red wire) and the other end into pin 4, 5 or 6 (black wire).
If the leads of the load are too big, you may need to use smaller gauge wire for the load resistor connection.
Load resistor value: 6.5Ω ~ 7Ω, 10W or higher.

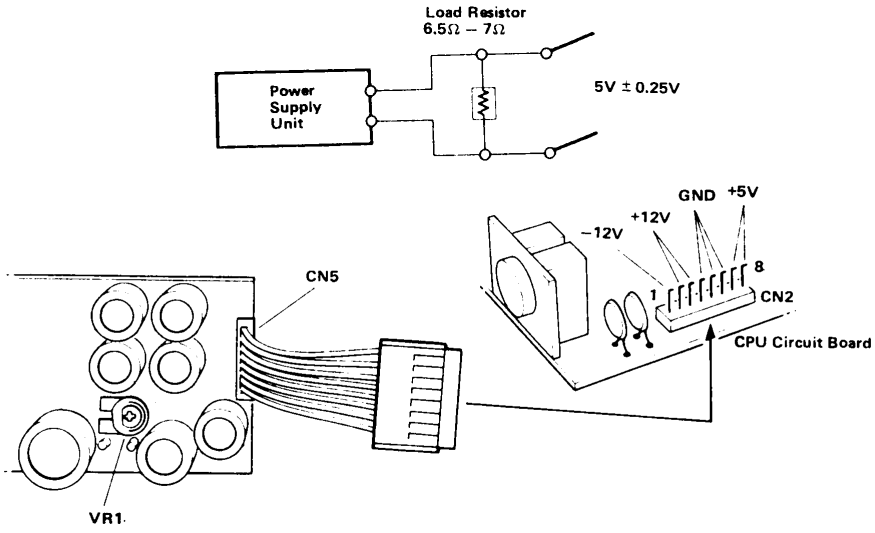

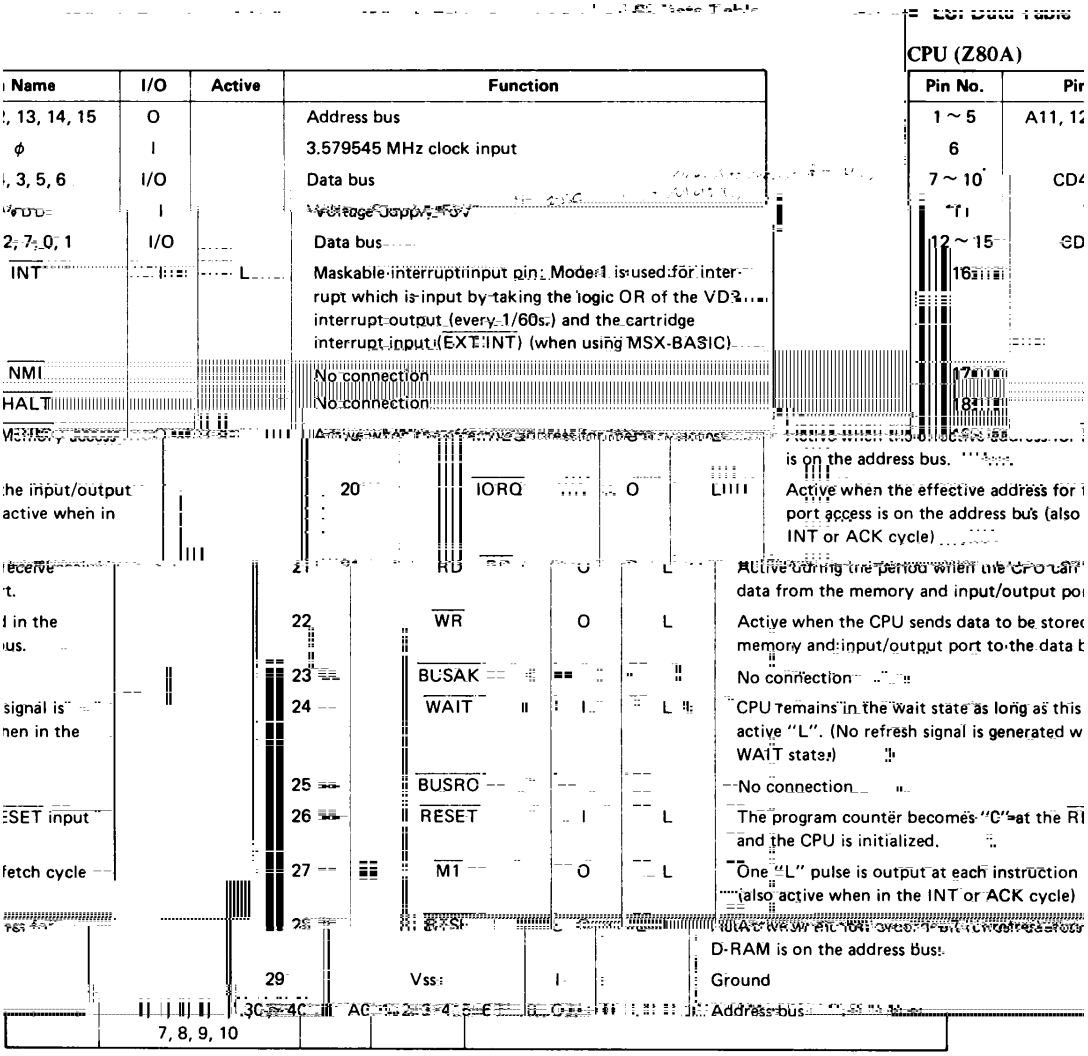

CPU (Z80A)

Name	I/O	Active	Function	Pin No.	Pin
, 13, 14, 15	O		Address bus	1 ~ 5	A11, 12
ϕ	I		3.579545 MHz clock input	6	
, 3, 5, 6	I/O		Data bus	7 ~ 10	CD4
	I		Voltage Supply, +5V	11	
2, 7, 0, 1	I/O		Data bus	12 ~ 15	CD
$\overline{INT}$	I	L	Maskable interrupt input pin. Mode 1 is used for interrupt which is input by taking the logic OR of the VDP interrupt output (every 1/60s.) and the cartridge interrupt input ($\overline{EXT.INT}$) (when using MSX-BASIC)	16	
$\overline{NMI}$			No connection	17	
$\overline{HALT}$			No connection	18	
					is on the address bus.
he input/output active when in			20 $\overline{IORQ}$ O L		Active when the effective address for port access is on the address bus (also INT or ACK cycle)
eceive t.			21 $\overline{RD}$ O L		Active during the period when the CPU can data from the memory and input/output po
l in the us.			22 $\overline{WR}$ O L		Active when the CPU sends data to be stored memory and input/output port to the data b
			23 $\overline{BUSAK}$		No connection
signal is hen in the			24 $\overline{WAIT}$ I L		CPU remains in the wait state as long as this active "L". (No refresh signal is generated w WAIT state)
			25 $\overline{BUSRQ}$		No connection
ESET input			26 $\overline{RESET}$ I L		The program counter becomes "0" at the RI and the CPU is initialized.
fetch cycle			27 $\overline{M1}$ O L		One "L" pulse is output at each instruction (also active when in the INT or ACK cycle)
			28		D-RAM is on the address bus.
			29 Vss I		Ground
			30 ~ 40 A0 ~ A15 O		Address bus
			7, 8, 9, 10		

MMC (MSX Memory Controller – YM5214)

Pin No.	Pin Name	I/O	Active	Function
1	Vss	I		Ground
2	$\overline{RD}$	I	L	CPU (Z80A) $\overline{RD}$ signal input
3	$\overline{IORQ}$	I	L	CPU (Z80A) $\overline{IORQ}$ signal input
4	$\overline{M1}$	I	L	CPU (Z80A) $\overline{M1}$ signal input
5 ~ 9	AD7, 6, 5, 4, 3	I		CPU (Z80A) address 7 ~ 3 signal input
10	VDD			Voltage Supply +5V
11	$\overline{PRT}$	O	L	Printer interface port select
12	$\overline{VDP}$	O	L	VDP port select
13	SSG	O	H	SSG port select
14	$\overline{PPI}$	O	L	PPI port select
15	$\overline{WAIT}$	O	L	WAIT signal
16	$\overline{WE}$	O	L	D-RAM $\overline{WE}$ signal
17	$\overline{RAS}$	O	L	D-RAM $\overline{RAS}$ signal
18	MPX	O	H	D-RAM address multiplex signal
19	$\overline{CAS2}$	O	L	D-RAM (SLOT# 0,8000H-BFFFH) $\overline{CAS}$ signal
20	$\overline{CAS3}$	O	L	D-RAM (SLOT # 0,C000H-FFFFH) $\overline{CAS}$ signal
21	$\overline{ROMCS}$	O	L	MSX-BASIC ROM select signal
22	$\overline{CS1}$	O	L	ROM 4000H-7FFFH select signal
23	$\overline{CS2}$	O	L	ROM 8000H-BFFFH select signal
24	$\overline{RESET}$	I	L	SYSTEM RESET signal input
25	$\overline{SLT3}$	O	L	SLOT#3 select signal
26	$\overline{SLT2}$	O	L	SLOT#2 select signal
27	$\overline{SLT1}$	O	L	SLOT#1 select signal
28	CS3H	I		Slot select register (PPI PORT—A) signal
29	CS3L	I		Slot select register (PPI PORT—A) signal
30	CS2H	I		Slot select register (PPI PORT—A) signal
31	CS2L	I		Slot select register (PPI PORT—A) signal
32	CS1H	I		Slot select register (PPI PORT—A) signal
33	CS1L	I		Slot select register (PPI PORT—A) signal
34	CS0H	I		Slot select register (PPI PORT—A) signal
35	CS0L	I		Slot select register (PPI PORT—A) signal
36, 37	A15, A14	I		CPU (Z80A) ADDRESS 15, 14 signal input
38	$\overline{MREQ}$	I	L	CPU (Z80A) $\overline{MREQ}$ signal input
39	$\overline{RFSH}$	I	L	CPU (Z80A) $\overline{RFSH}$ signal input
40	ϕ	I		CPU (Z80A) CLOCK signal input

VDP (Video Display Processor – TMS9918A)

Pin No.	Pin Name	I/O	Active	Function
1	$\overline{RAS}$	O	L	Row address strobe
2	$\overline{CAS}$	O	L	VRAM column address strobe
3 ~ 10	AD7, 6, 5, 4, 3, 2, 1, 0 (MSB)	O		VRAM address and data bus (VRAM row and colums address, multiplexed data and output) (AD0 is the most significant bit)
11	R/$\overline{W}$	O	H=read	VRAM write strobe
12	Vss	I		Ground
13	MODE	I		CPU interface mode select
14	$\overline{CSW}$	I	L	Write strobe
15	$\overline{CSR}$	I	L	Read strobe
16	$\overline{INT}$	O	L	Interrupt signal to CPU
17 ~ 24	CD7, 6, 5, 4, 3, 2, 1, 0 (MSB)	I/O		CPU data bus (CD0 is the most significant bit) CPU data bus (CD0 is the most significant bit)
25 ~ 32	RD7, 6, 5, 4, 3, 2 1, 0 (MSB)	I		VRAM read data bus (RD0 is the most significant bit)
33	VDD	I		Voltage Supply +5V
34	$\overline{RESET}$/SYNC	I		3-level input pin (less than 0.6V: $\overline{RESET}$ active → VDP initialized, over 10V:SYNC active → VDP synchronized externally)
35	B–Y/EXTVID	O		B–Y color signal out/external video signal input
36	Y/COMVID	O		Y signal out (brightness and synchronous composite video signal)
37	GROMCLK	O		Output of quartz oscillator (or external clock) signal frequency divided by 24 (ordinarily not used)
38	R–Y/CLOCK	O		R–Y color signal out/clock ϕ output
39	XTAL2	I		Quartz oscillator connecting terminal
40	XTAL1			(10.73864MHz) (When driving external clock, drive both inputs)

● 74LS145 (iG12410)

O.C.BCD to DECIMAL Decorder/Driver

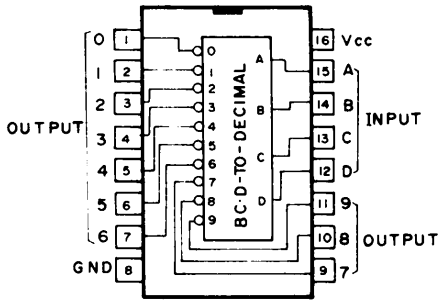

Truth Table

No	INPUTS D	C	B	A	OUTPUTS 0	1	2	3	4	5	6	7	8	9
0	L	L	L	L	L	H	H	H	H	H	H	H	H	H
1	L	L	L	H	H	L	H	H	H	H	H	H	H	H
2	L	L	H	L	H	H	L	H	H	H	H	H	H	H
3	L	L	H	H	H	H	H	L	H	H	H	H	H	H
4	L	H	L	L	H	H	H	H	L	H	H	H	H	H
5	L	H	L	H	H	H	H	H	H	L	H	H	H	H
6	L	H	H	L	H	H	H	H	H	H	L	H	H	H
7	L	H	H	H	H	H	H	H	H	H	H	L	H	H
8	H	L	L	L	H	H	H	H	H	H	H	H	L	H
9	H	L	L	H	H	H	H	H	H	H	H	H	H	L
INVALID	H	L	H	L	H	H	H	H	H	H	H	H	H	H
	H	L	H	H	H	H	H	H	H	H	H	H	H	H
	H	H	L	L	H	H	H	H	H	H	H	H	H	H
	H	H	L	H	H	H	H	H	H	H	H	H	H	H
	H	H	H	L	H	H	H	H	H	H	H	H	H	H
	H	H	H	H	H	H	H	H	H	H	H	H	H	H

SSG (Software Sound Generator – YM-2149)

Pin No.	Pin Names	I/O	Active	Function
1	Vss			Ground
2	NC			No connection
3, 4	ANALOG CHANNEL B, A	O		Output of D/A converter
5	NC			No connection
6 ~ 13	IOB7, 6, 5, 4, 3, 2, 1, 0	I/O		Parallel data 8 bit port input/output
14 ~ 21	IOA7, 6, 5, 4, 3, 2, 1, 0	I/O		Parallel data 8 bit port input/output
22	CLOCK	I		Supplies reference time for tone, noise and envelope generator
23	$\overline{\text{RESET}}$	I	L	$\overline{\text{RESET}}$ input
24	A9	I		Fixed to "L"
25	A8	I		Fixed to "H"
26	$\overline{\text{SEL}}$		L	Selection of CLOCK frequency
27	BDIR	I		
28, 29	BC2, BC1	I		
30 ~ 37	DA7, 6, 5, 4, 3, 2, 1, 0	I/O		Data input/output
38	ANALOG CHANNEL C	O		Output of D/A converter
39	TEST1			Test pin
40	V_{DD}			Voltage Supply +5V

PPI (Programmable Peripheral Interface – μPD8255A)

Pin No.	Pin Name	I/O	Active	Function
1 ~ 4	PA3, 2, 1, 0			Port A (BIT)
5	$\overline{\text{RD}}$	I	L	Read input
6	$\overline{\text{CS}}$		L	Chip select
7	GND			Ground
8, 9	A1, A0	I		Internal register select signal input
10 ~ 17	PC7, 6, 5, 4, 0, 1, 2, 3			Port C (BIT)
18 ~ 25	PB0, 1, 2, 3, 4, 5, 6, 7			Port B (BIT)
26	V_{DD}			Power Supply +5V
27 ~ 34	D7, 6, 5, 4, 3, 2, 1, 0			Data bus
35	RESET			RESET input
36	$\overline{\text{WR}}$		L	Write input
37 ~ 40	PA7, 6, 5, 4			Port A (BIT)

RAM (MB81416-12)

unction				Pin No.	Pin Name	I/O	Active	F
				1	$\overline{OE}$	I	L	Output enable
				2, 3	DQ1, DQ2	I/O		Data input/output
				4	$\overline{WE}$	I	L	Write enable
				5	$\overline{RAS}$	I		Lower address strobe
				6 ~ 8	A6, 5, 4	I		Address input
/DD			Voltage Supply +5V	9				\
3, 2, 1, 0	I		Address input	10 ~ 14				A7, 3
DQ3	I/O		Data input/output	15				[
$\overline{CAS}$	I	L	Column address strobe	16				
DQ4	I/O		Data input/output	17				
Vss			Ground	18				
			Note) MB81416 is an N channel MOS RAM consisting of 16384 word x 4 bit. $\overline{RAS}$ only refresh type, write cycle (early write) type.;					

) (μPD416C)

n Name	I/O	Active	Function
VBB			−5V
DIN	I		Data input
$\overline{WE}$	I	L	Write enable, write mode to D-RAM at active "L"
RAS	I	L	Lower address strobe
0, 2, 1	I		Address bus
VDD			+12V
Vcc			+5V
, 4, 3, 6	I		Address bus
DOUT	O		Data output
$\overline{CAS}$	I	L	Column address strobe
Vss			Ground
			Note) MB8116 is an N channel MOS RAM consisting of 16384 word x 1bit Output is three state. $\overline{RAS}$ only refresh type, write cycle (early write) type. VDD: +12V, Vcc: +5V, VBB: −5V

V−RAM (MB8116

Pin No.	Pi
1	
2	
3	
4	
5 ~ 7	A
8	
9	
10 ~ 13	A5
14	[
15	
16	

S157 (iG059650)

Data Selectors

● 74LS

2 to 1 D

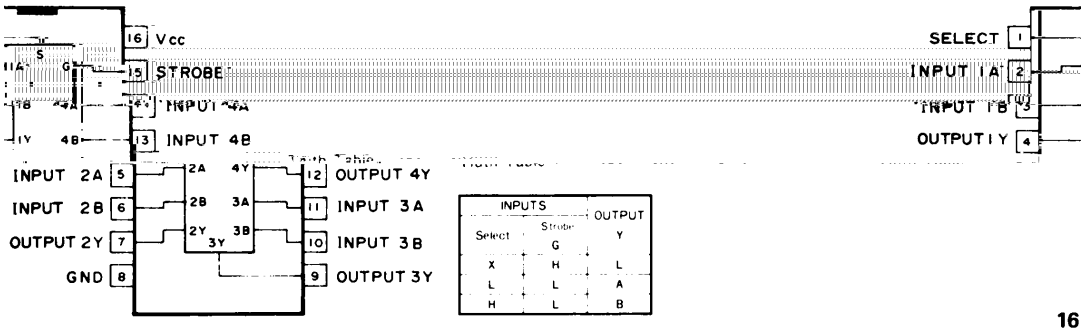

(CPU)

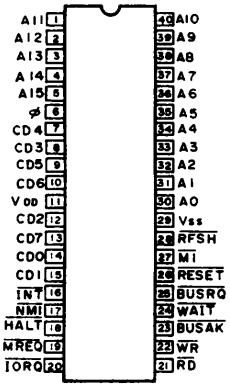

(VDP)

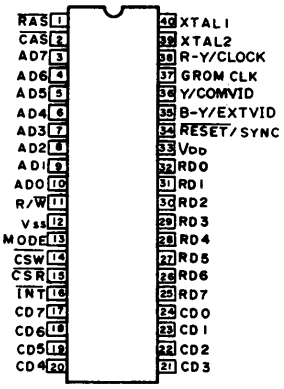

(MMC)

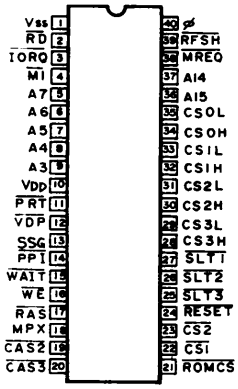

μPD8255A
(PPI)

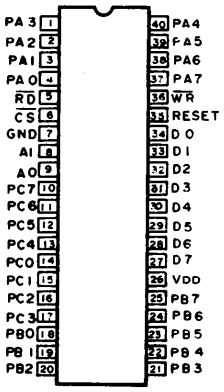

YM2149
(SSG)

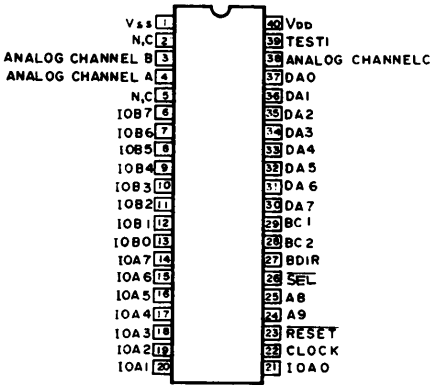

MB81416-12
(RAM)

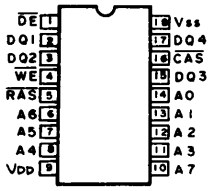

MB8116
(V-RAM)

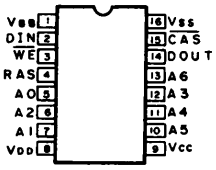

■ IC Diagrams

●74LS08 (iG043750)
Quad 2 Input AND

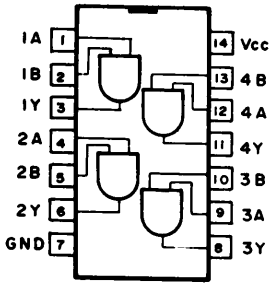

●74LS14 (iG049650)
Hex Schmitt
Trigger Inverters

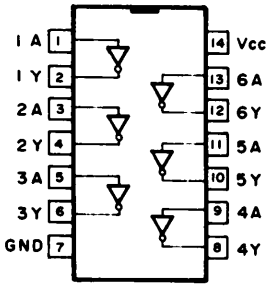

●74LS32 (iG049850)
Quad 2 Input
O.C. NOR Buffer

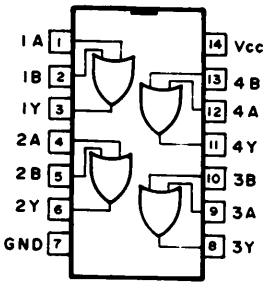

●74LS74 (iG044050)
Dual D-FFs
with preset and clear

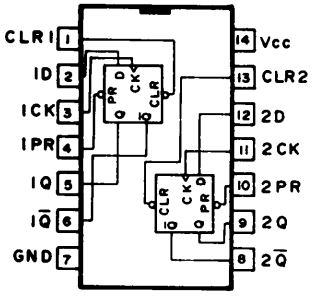

●74LS244 (iG060050)
Octal 3 State Bus Buffers

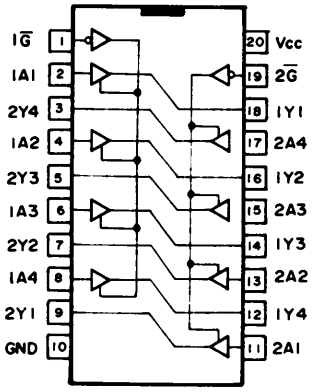

●74LS374
Octal 3 State D FFs

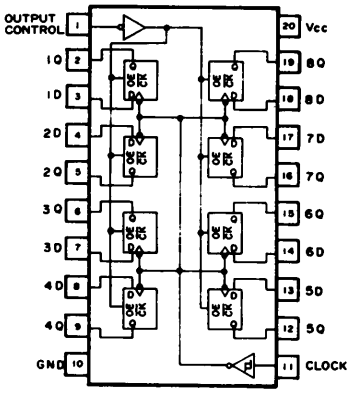

●74LS09(iG122500)
Quad 2 Input O.C.AND

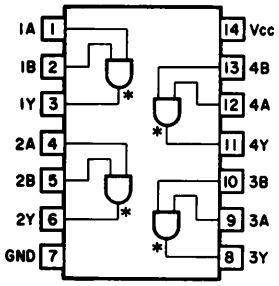

●74LS125(iG059550)
Quad 3 State Bus Buffers

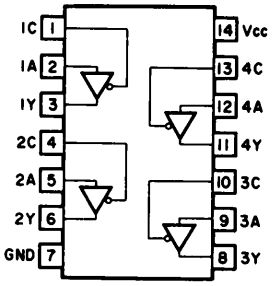

●74LS367(iG071600)
Hex 3 State Bus Buffers

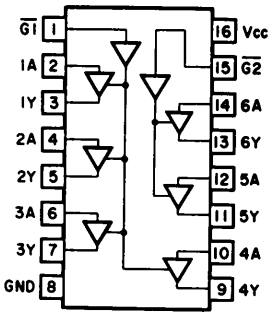

■ **Power Supply Unit Schematic Diagram**

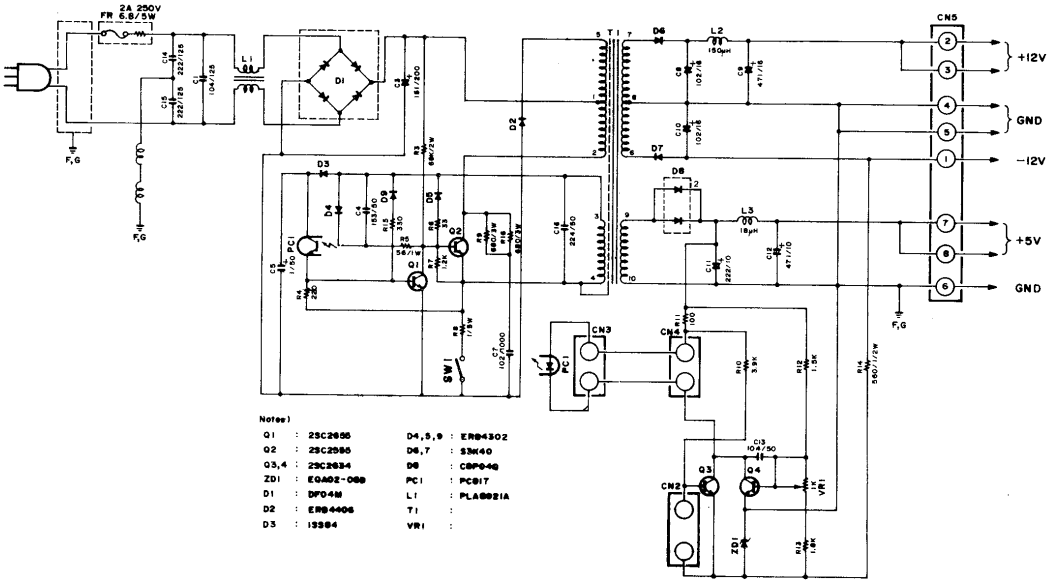

Notes)

Q1	: 2SC2655	D4,5,9	: ERB4302
Q2	: 2SC2555	D6,7	: S3K40
Q3,4	: 2SC2634	D8	: CBP04Q
ZD1	: EQA02-08B	PC1	: PC817
D1	: DF04M	L1	: PLA892IA
D2	: ERB4406	T1	:
D3	: 1S384	VR1	:

■ **Power Supply Circuit Board**

■ Wiring Diagram

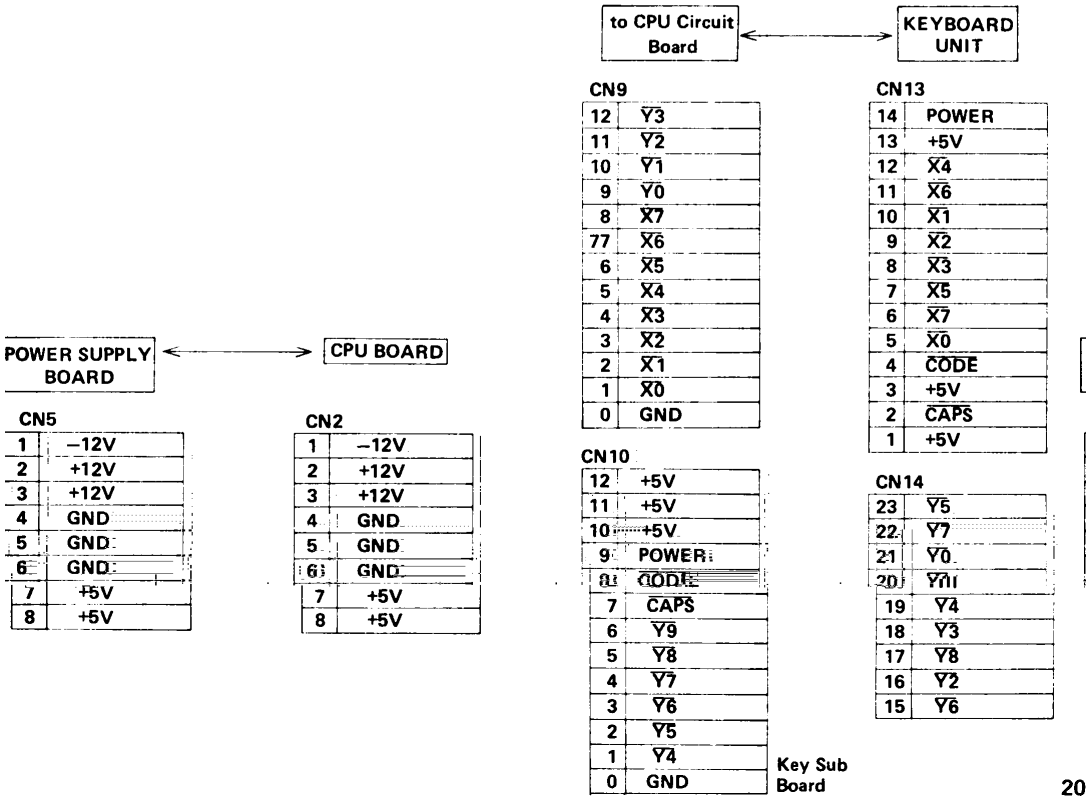

■ **Keyboard Matrix**

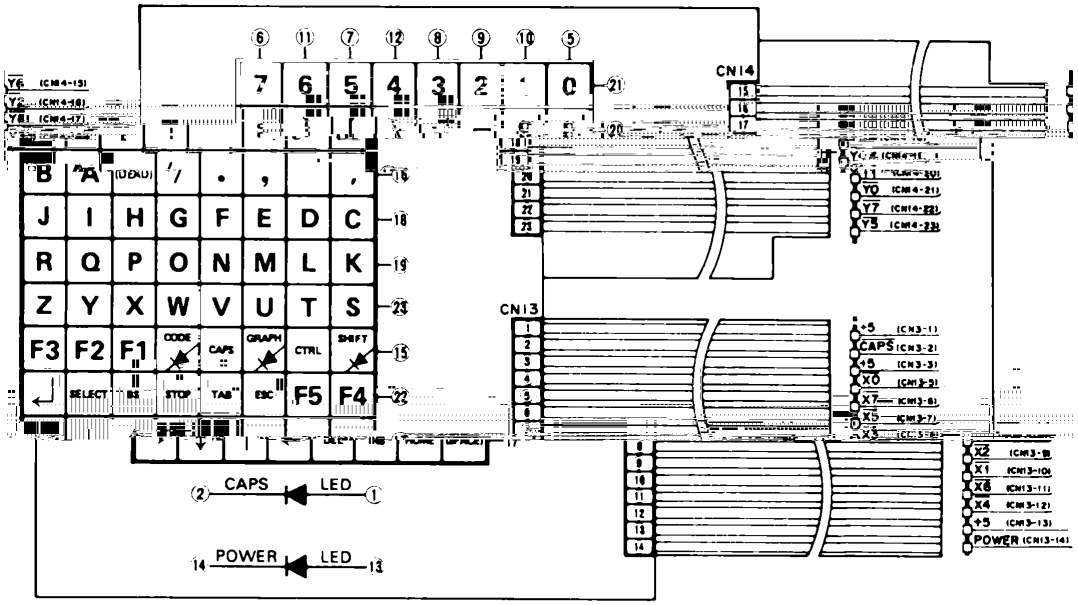

• **Keyboard Matrix Schematic Diagram**

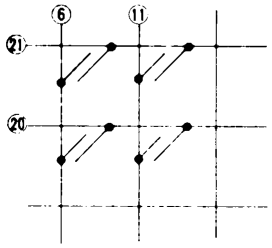

■ **Key Sub Circuit Board**

■ **U-Clock Card Circuit Board**

■ CX-5MU Schematic Circuit Diagram

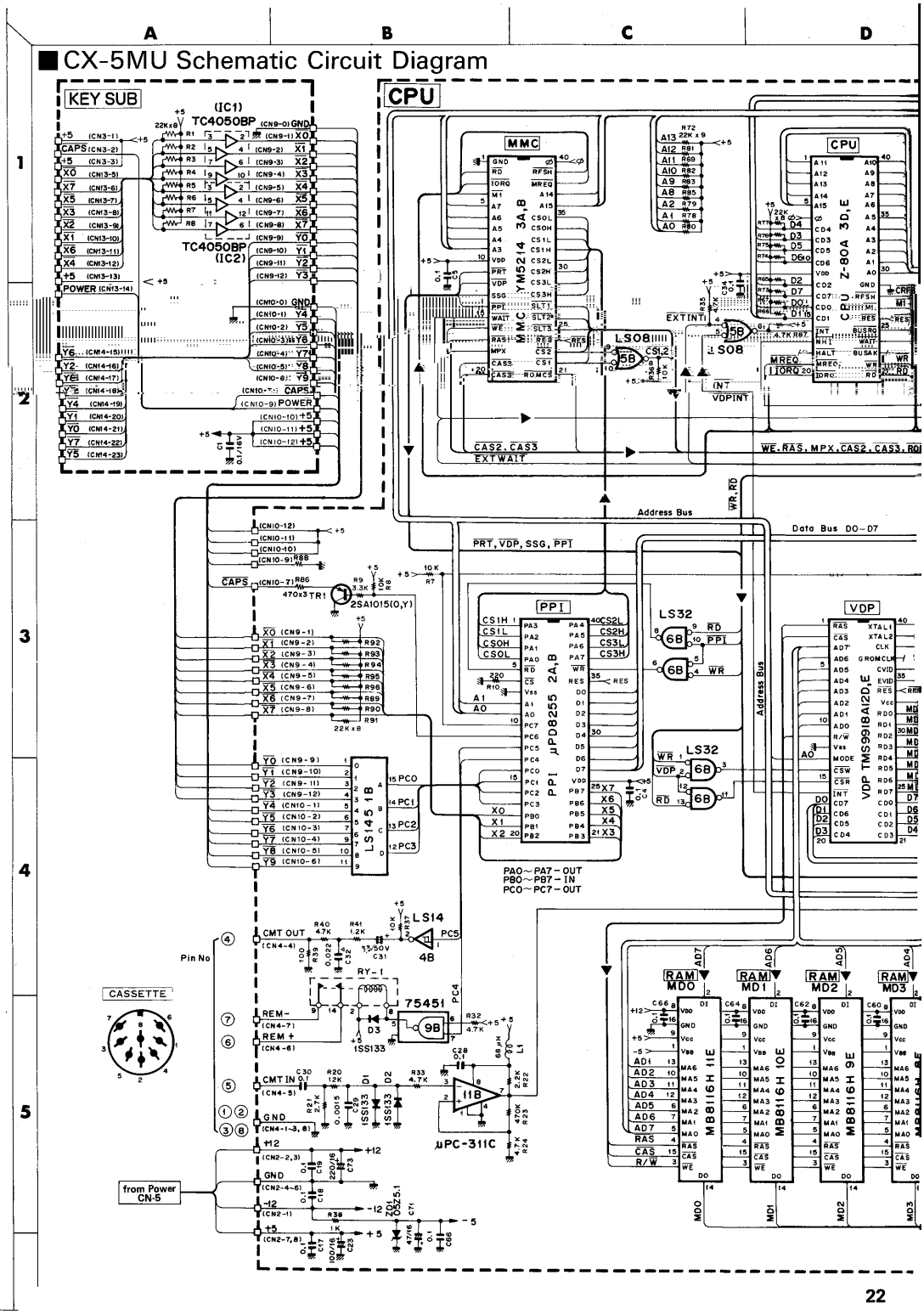

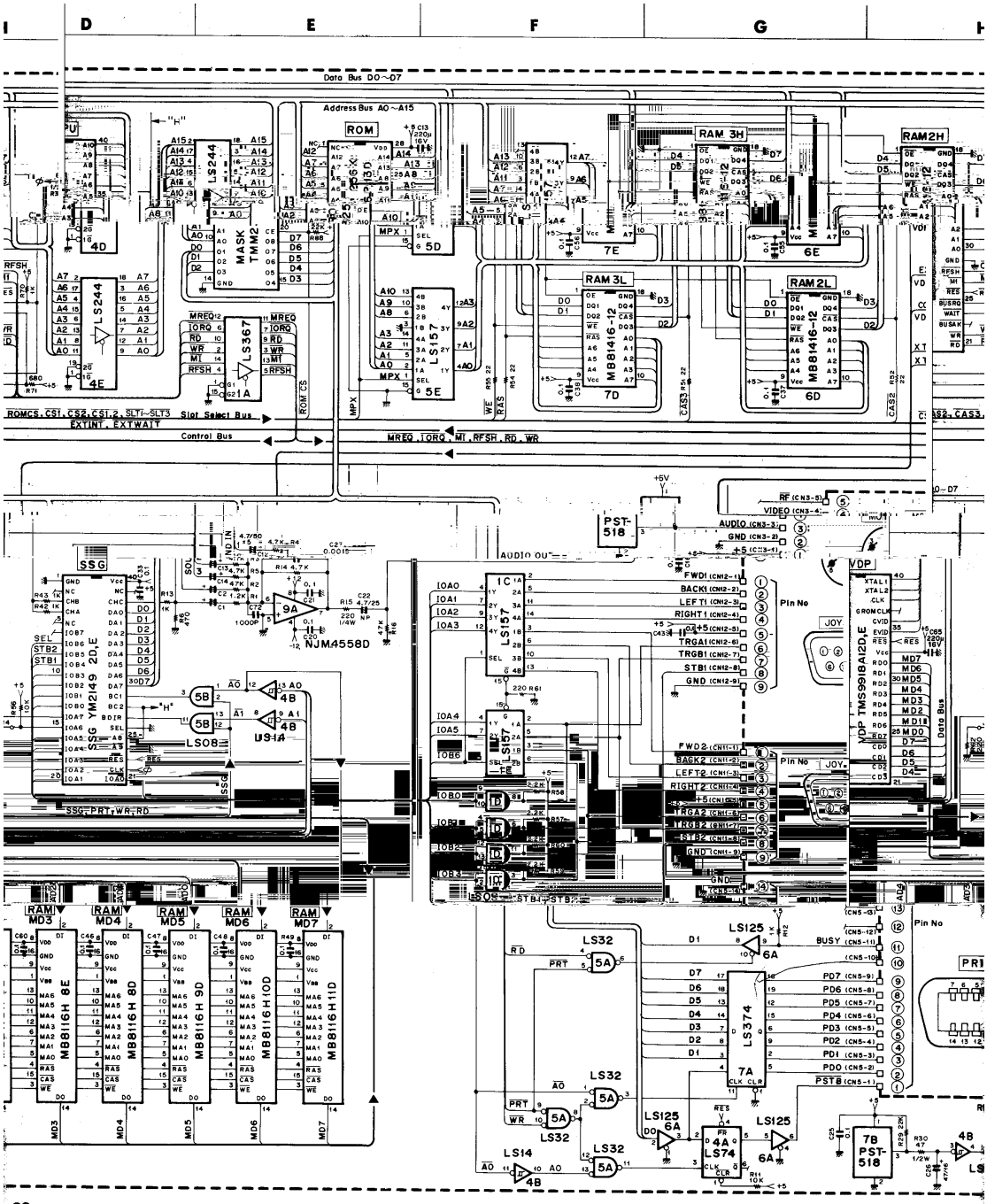
D
E
F
G
Data Bus D0~D7
Address Bus A0~A15
ROM
RAM 3H
RAM2H
RAM 3L
RAM 2L
LS244
LS367
LS157
MB81416-12
ROMCS, CS1, CS2, CS1.2, SLT1~SLT3
Slot Select Bus
EXTINT, EXTWAIT
Control Bus
MREQ, IORQ, MI, RFSH, RD, WR
PST-518
SSG
SSG YM2149 2D,E
NJM4558D
LS08
US14
LS32
LS125
LS374
LS74
LS14
VDP
VDP TMS9918A12D,E
Pin No
RAM MD3
RAM MD4
RAM MD5
RAM MD6
RAM MD7
MB8116H 8E
MB8116H 8D
MB8116H 9D
MB8116H10D
MB8116H11D
22
23

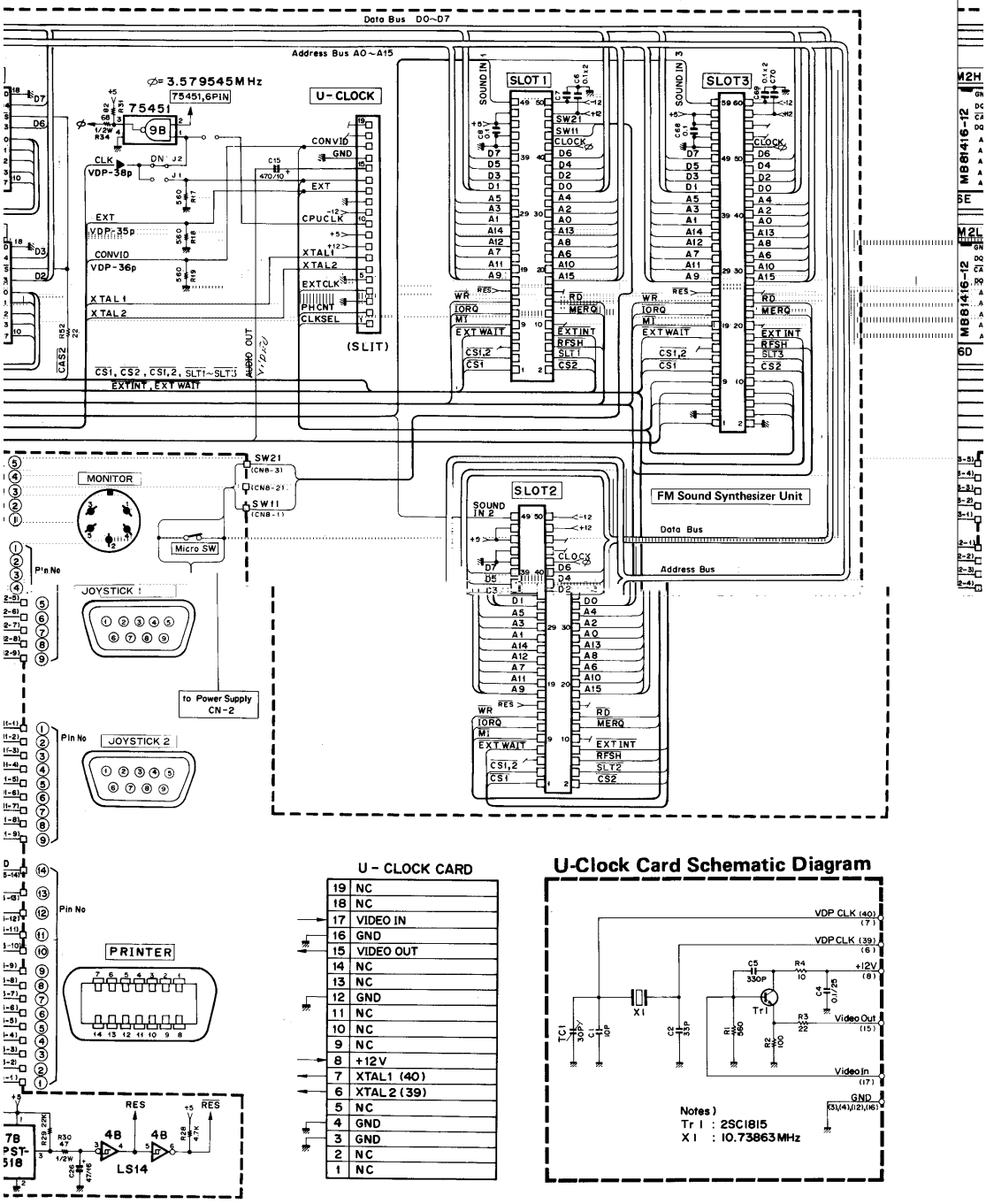

U - CLOCK CARD

19	NC
18	NC
17	VIDEO IN
16	GND
15	VIDEO OUT
14	NC
13	NC
12	GND
11	NC
10	NC
9	NC
8	+12V
7	XTAL1 (40)
6	XTAL2 (39)
5	NC
4	GND
3	GND
2	NC
1	NC

U-Clock Card Schematic Diagram

- CPU Circuit Board

■ Block Diagram

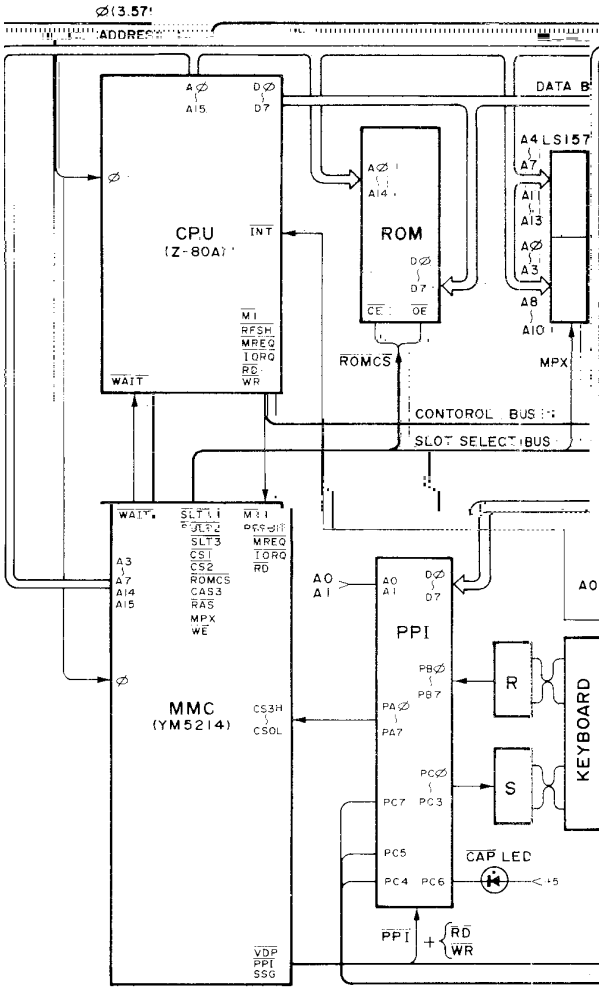

■ Keyboard Layout

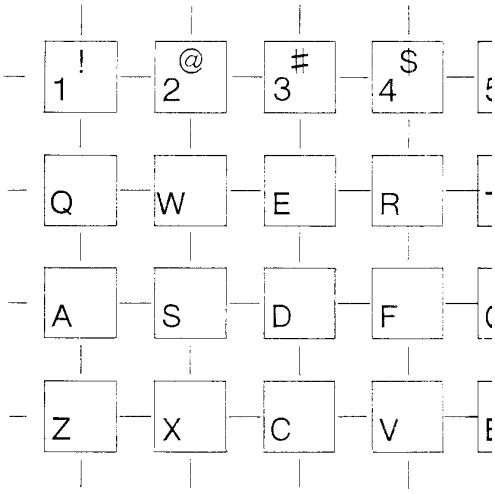

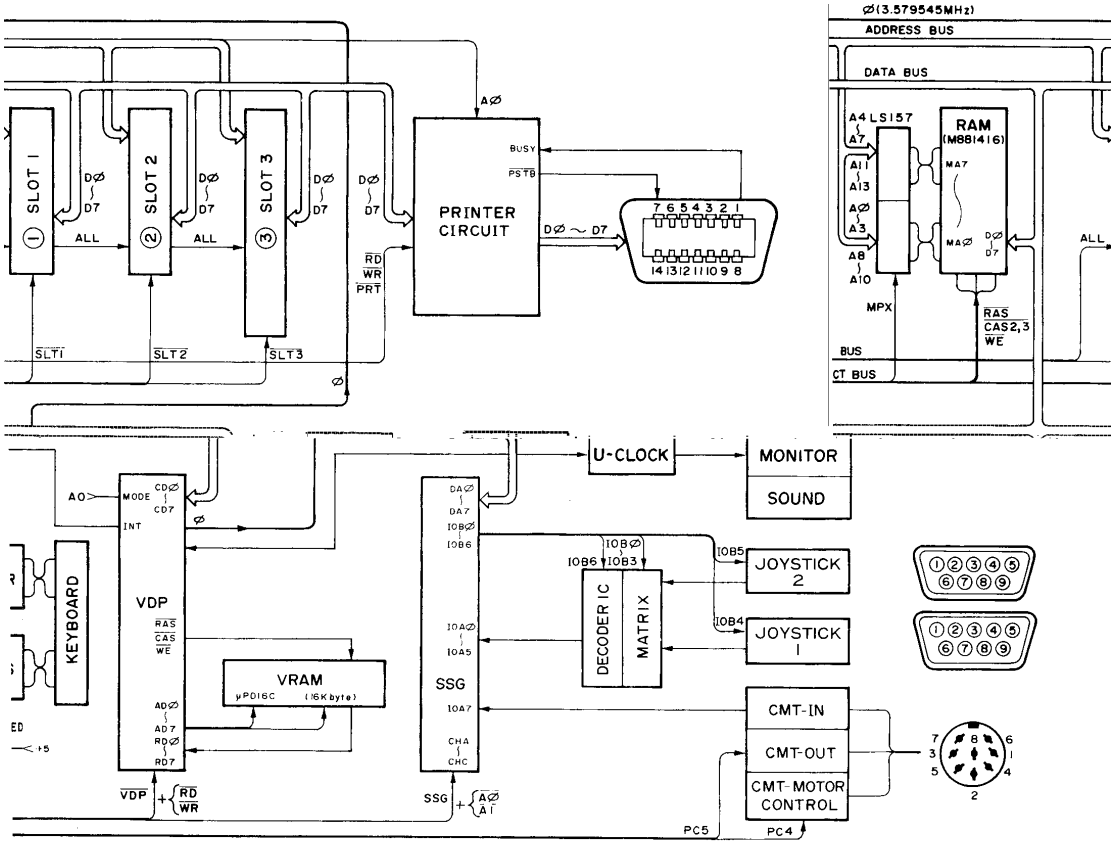
Ø(3.579545MHz)
ADDRESS BUS
DATA BUS
SLOT 1
SLOT 2
SLOT 3
ALL
PRINTER CIRCUIT
BUSY
PSTB
RD
WR
PRT
SLT1
SLT2
SLT3
A4 LS157
RAM (M8814 16)
MPX
RAS
CAS2,3
WE
BUS
CT BUS
U-CLOCK
MONITOR
SOUND
KEYBOARD
VDP
VRAM
μPD16C (16Kbyte)
SSG
DECODER IC
MATRIX
JOYSTICK 2
JOYSTICK 1
CMT-IN
CMT-OUT
CMT-MOTOR CONTROL
PC5
PC4

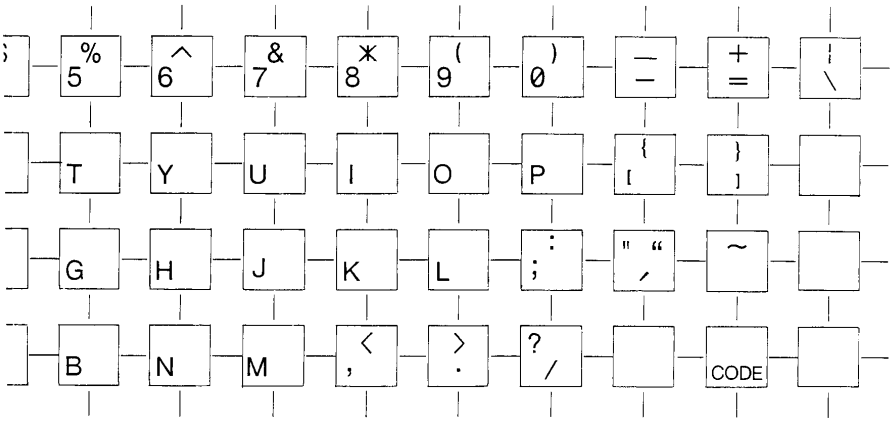
5 %
6 ^
7 &
8 *
9 (
0)
T
Y
U
I
O
P
G
H
J
K
L
B
N
M
CODE

■ FM Sound Synthesizer Unit Schematic Diagram

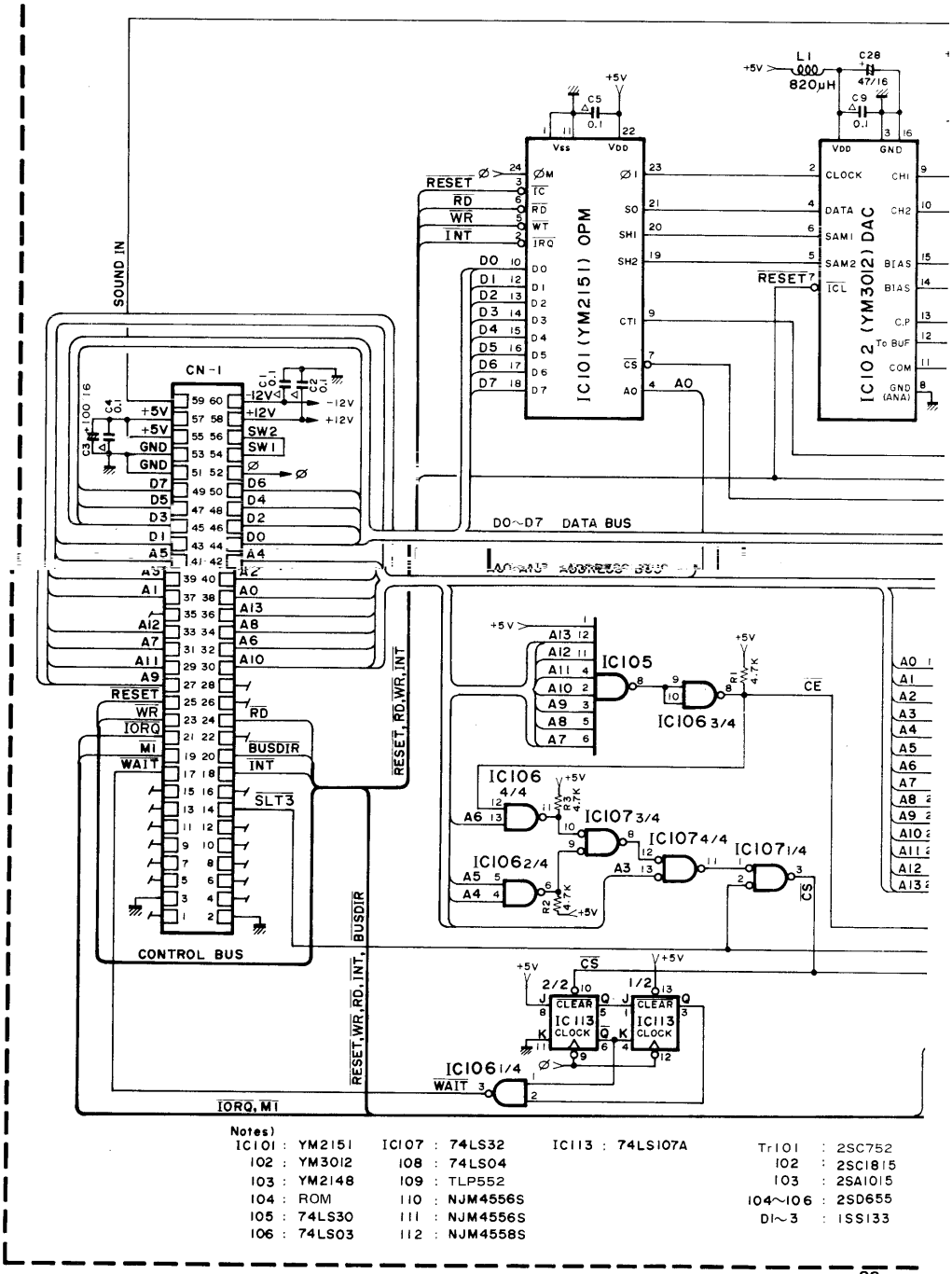

Notes)

IC101	: YM2151	IC107	: 74LS32	IC113	: 74LS107A
102	: YM3012	108	: 74LS04		
103	: YM2148	109	: TLP552		
104	: ROM	110	: NJM4556S		
105	: 74LS30	111	: NJM4556S		
106	: 74LS03	112	: NJM4558S		

Tr101	:	2SC752
102	:	2SC1815
103	:	2SA1015
104~106	:	2SD655
D1~3	:	1SS133

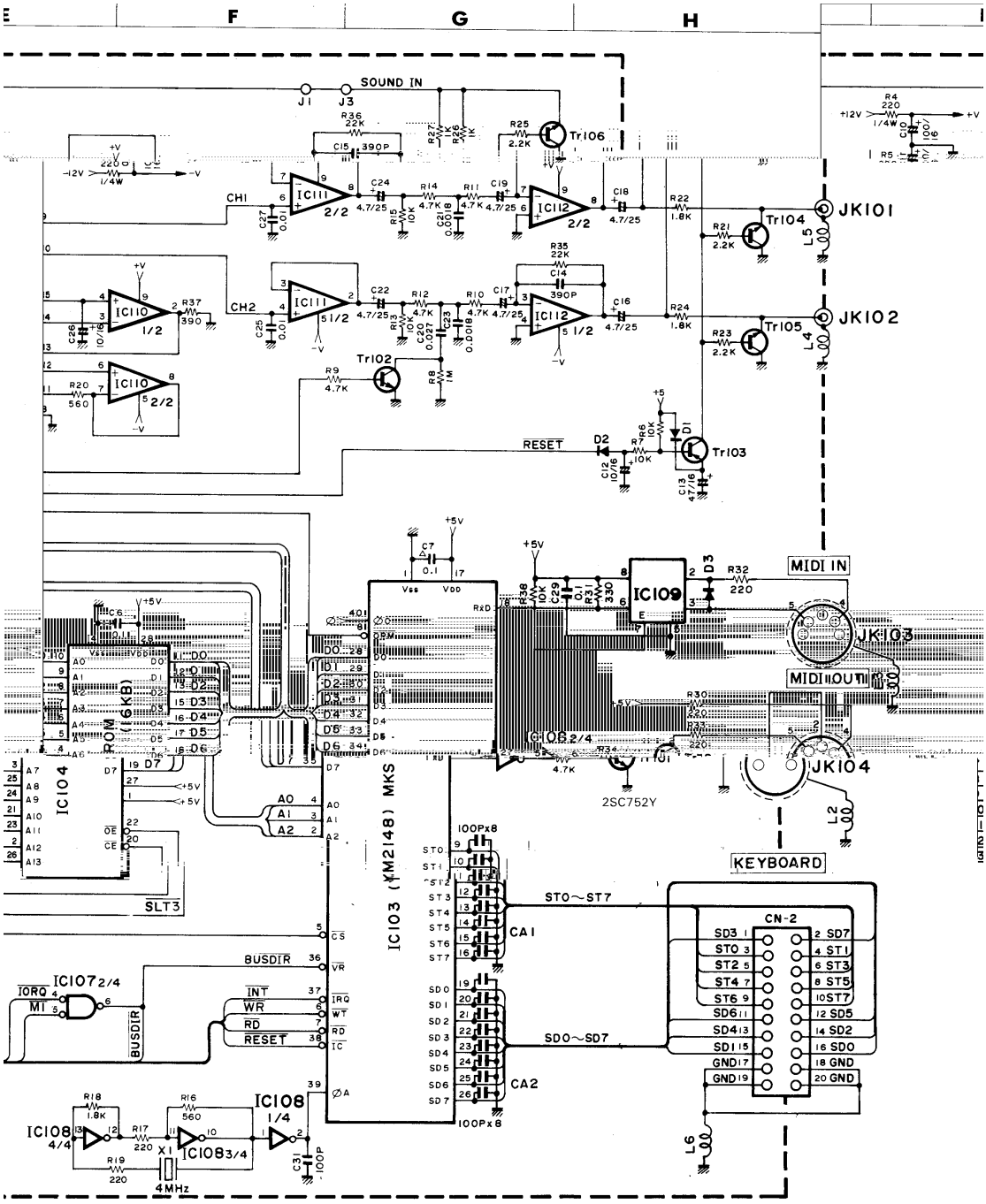

F
G
H
SOUND IN
J1
J3
R36
22K
C15
390P
R27
1K
R26
1K
R25
2.2K
Tr106
CH1
IC111
2/2
C24
4.7/25
R14
4.7K
R11
4.7K
C19
4.7/25
IC112
2/2
C18
4.7/25
R22
1.8K
R21
2.2K
Tr104
JK101
L5
CH2
IC111
1/2
C22
4.7/25
R12
4.7K
R10
4.7K
C17
4.7/25
R35
22K
C14
390P
IC112
1/2
C16
4.7/25
R24
1.8K
R23
2.2K
Tr105
JK102
L4
IC110
1/2
R37
390
IC110
2/2
R20
560
Tr102
R9
4.7K
R8
1M
RESET
D2
R7
10K
R6
10K
D1
Tr103
C12
10/16
C13
47/16
C7
0.1
+5V
IC109
D3
R32
220
MIDI IN
JK103
MIDI OUT
R30
220
R33
220
IC106 2/4
R34
4.7K
2SC752Y
JK104
L2
IC104
ROM (16KB)
SLT3
IC103 (YM2148) MKS
100Px8
ST0~ST7
CA1
CA2
SD0~SD7
KEYBOARD
CN-2
SD3
ST0
ST2
ST4
ST6
SD6
SD4
SD1
GND
SD7
ST1
ST3
ST5
ST7
SD5
SD2
SD0
GND
L6
BUSDIR
IC107 2/4
IORQ
M1
INT
WR
RD
RESET
IC108
4/4
IC108 3/4
IC108
1/4
R18
1.8K
R17
220
R16
560
R19
220
X1
4MHz
C31
100P

■ Timing Chart

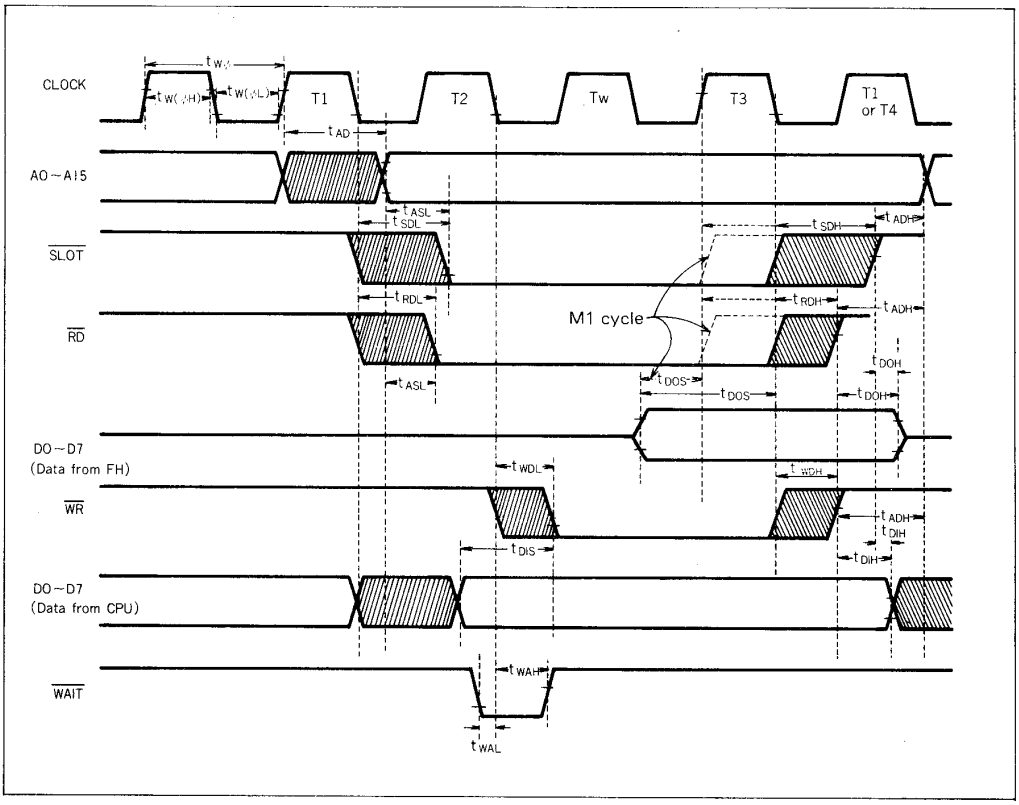

■ FM Circuit Board

FM sound synthesizer unit. When used with a D/A converter (DAC), 8 audio tone
ıe R and L channels.
ıpability and it is also equipped with a noise generator, vibrato oscillator, amplitude
effect generator and timer circuitry. 2 sets of times are used and when a timer
ɜst takes place.

his is a D/A converter to produce 2 channel (left and right) audio signal.

ɔl MKS and OPM and located in SLOT #3 000H ~ 3F7FH.

eyboard scan function and supports MODE 2 IRQ for CPU.
data transfer of 31.25 K baud transfer rate. Keyboard scan is a function to handle
he connected music keyboard.
ace, due to demand by CPU, VECTOR ADDRESS goes out to DATA BUS.

■ LSI Function

1) OPM (YM2151)
FM sound generator of the
signals can be obtained at tl
The YM2151 has 8 note c
modulation circuit, tonal
overflows an interrupt requ

2) DAC (YM3012)
As related in OPM section,

3) ROM (YM2270-2)
Program is written to contr

4) MKS (YM2148)
MKS has a MIDI function,
MIDI is a synchronus serial
keyboard ON/OFF data of
When MODE 2 IRQ takes p

■ FM Sound Synthesizer U

nit Address Map

	OUTPUT			INTERNAL REGISTERS			AD DRESS	INP		
	A2	A1	A0	OPM				CS	RD	WT
								1		

		1	1					
3FF0H	0	0	1	0	0	0	0	OPM STATUS REGISTER * YM2195(OPM)
	0	1	0	0	0	0		OPM ADDRESS REGISTER "
3FF1H	0	0	1	0	0	1	0	OPM DATA REGISTER "
	0	1	0	0	0	1		OPM DATA REGISTER "
3FF2H	0	1	0	0	1	0		ST0 ~ ST7 OUTPUT DATA REGISTER
	0	0	1	0	1	0		SD0 ~ SD7 INPUT DATA REGISTER
3FF3H	0	1	0	0	1	1		MiDi IRQ VECTOR ADDRESS REGISTER
		0	1	0	1	1		
3FF4H	0	1	0	1	0	0		EXTERNAL IRQ VECTOR ADDRESS REGISTER
		0	1	1	0	0	1	
3FF5H	0	0	1	1	0	1		MIDI UART DATA READ BUFFER
	0	1	0	1	0	1		MIDI UART DATA WRITE BUFFER
3FF6H	0	0	1	1	1	0		MIDI UART STATUS REGISTER
	0	1	0	1	1	0		MIDI UART COMMAND REGISTER
3FF7H				1	1	1		

■ LSI Data Table
YM2148 MKS

Pin No.	Pin Name	I/O	Function
1	V_{SS}	–	Ground
2	A_0	I	Selection data for internal registers
3	A_1	I	
4	A_2	I	
5	$\overline{CS}$	I	Chip select
6	$\overline{WT}$	I	Write request signal
7	$\overline{RD}$	I	Read request signal
8	$\overline{OPM}$	O	Address decode out to OPM
9	ST_0	O	(Latch port in 2nd address) Use as strobe output to musical keyboard
≀	≀	≀	
16	ST_7	O	
17	V_{DD}	–	Power Supply + 5V DC
18	R_{XD}	I	MIDI serial data
19	SD_0	I	Input port from musical keyboard
≀	≀	≀	
26	SD_7	I	
27	T_{XD}	O	MIDI serial data
28	D_0	I/O	I/O port for 3-state data bus
≀	≀	≀	
35	D_7	I/O	
36	$\overline{VR}$	I	VECTOR ADDRESS REQUEST / for Z80 MODE 2 IRQ
37	$\overline{IRQ}$	O	Interrupted request data when MIDI data transmission
38	$\overline{IC}$	I	"L" reset data IRQ → "H", $\overline{OPM}$ → "H"
39	ϕA	I	Baud-rate setting clock for MIDI transmission
40	ϕ	I	Master clock

2151 OPM

Pin Name	I/O	Function
Vss	—	Ground
[illegible]	[illegible]	[illegible] output port
3	$\overline{IC}$	I	"L" reset
4	A_0	I	Selection data for internal registers
5	$\overline{WT}$	I	Write request signal
6	$\overline{RD}$	I	Read request signal
7	$\overline{CS}$	I	Chip select
8	GND		Analog ground
9	$\overline{CT_1}$	O	Filter selector data (CUTOFF FREQUENCE 2 KHz)
10	D_0	I/O	I/O port for 3-state data bus
11	Vss	—	Ground
12	D_1	I/O	I/O port for 3-state data
≀	≀	I	
18	D_7	I/O	
19	SH1	O	Data for separation L with R
20	SH2	O	
21	S_0	O	Serial data for sound source
22	VDD	—	Power supply + 5V
23	$\phi 1$	O	Clock for DAC
24	ϕ	I	Master clock

YM3012 DAC

Pin No.	Pin Name	I/O	Function
1	VDD	—	+ 5V
2	CLOCK	I	Timing clock for OPM
3	GND	—	Ground
4	DATA	I	Serial data for sound source
5	SAM2	I	Sampling data 1 (for separation L with R)
6	SAM1	I	Sampling data 2 (for separation L with R)
7	$\overline{ICL}$	I	Initial clear
8	GND	—	Analog ground
9	CH1	O	Analog data on 1ch (Lch)
10	CH2	O	Analog data on 2ch (Rch)
11	COM	O	Off-set control
12	T_0 BUF	O	
13	C,P	I	Center point
14	BIAS	O	BIAS compensation
15	BIAS	O	BIAS OUT
16	GND	—	Ground

ɪrts List

ɛtronic Components

Part No.		Description	品名	Remarks	ランク		Ref. No.
NA 55 16 70	***CPU Circuit Board Assembly***		C P U ボ ー ド Ass'y	(CX5MU)		※	
iG 12 19 00	IC	LH0080A	I C	CPU		※	
iG 12 21 00	〃	THS9918ANC	〃	VDP (CX5MU)		※	
iG 10 56 00	〃	D8255AC-5	〃	PPI		※	
iT 52 14 00	〃	YM5214	〃	MMC		※	
iT 21 49 00	〃	YM2149	〃	SSG		※	
iT 23 90 70	〃	YM23907	〃	USA-BASIC-ROM		※	
iG 12 23 00	〃	MB81416-12	〃	D RAM		※	
iG 10 43 00	〃	μPD416C-3(MB8116H)	〃	V RAM		※	
iG 04 37 50	〃 (P.C.B Address:5B)	SN74LS08	〃	Quad 2 Input AND			iG
12 25 00	〃 (P.C.B Address:1D)	SN74LS09	〃	Quad 2 Input O.C.AND		※	iG
04 96 50	〃 (P.C.B Address:4B)	SN74LS14	〃	Hex Schmitt Tigger Inv.			iG
04 98 50	〃 (P.C.B Address:6B,5A)	SN74LS32	〃	Quad 2 Input OR			iG
04 40 50	〃 (P.C.B Address:4A)	SN74LS74	〃	Dual D-FFs			iG
05 95 00	〃 (P.C.B Address:6A)	SN74LS125	〃	Quad 3 State Bus Buffers			iG
12 41 00	〃 (P.C.B Address:1B)	SN74LS145	〃	O.C.BCD to DECIMAL D/D		※	iG
05 96 50	〃 (P.C.B Address:1C,1E,5D,5E)	SN74LS157	〃	2 to 1 Data Selectors			iG
06 00 50	〃 (P.C.B Address:4D,4E)	SN74LS244	〃	Octal 3 State Bus Buffers			iG
05 07 00	〃 (P.C,B Address:7A)	SN74LS374	〃	Octal 3 State D-FFs			iG
07 16 00	〃 (P.C.B Address:1A)	SN74LS367	〃	Hex 3 State Bus Buffers			iG
07 76 00	〃 (P.C.B Address:9B)	SN75451	〃	Dual Peripheral AND			iG
00 13 90	〃	NJM4558D	〃	OP Amp.			iG
03 34 00	〃 (P.C.B Address:11B)	μPC-311C	〃			※	iG
12 43 00	〃 (P.C.B Address:7B)	PST518	〃	RESET IC		※	iG
10 15 10	Transistor	2SA1015(O,Y)	トランジスタ	TR1,2			iA
00 34 50	Diode	1SS133	ダイオード	D1,2,3			iF
00 40 80	Zener Diode	05Z5,1	ツェナーダイオード	ZD1			iF
85 42 20	Resistor	22 1/6W	抵抗	R51,52,54,55			HF
85 52 20	〃	220 〃	〃	R10,61,62,63,64,84,86			HF
85 54 70	〃	470 〃	〃	R06,84,86,88			HF
85 56 80	〃	680 〃	〃	R71			HF
85 61 00	〃	1K 〃	〃	R12,13,42,43,70			HF
85 61 20	〃	1.2K 〃	〃	R41			HF
85 62 20	〃	2.2K 〃	〃	R22,57,58,59,60			HF
85 62 70	〃	2.7K 〃	〃	R21			HF
85 63 30	〃	3.3K 〃	〃	R09,53			HF
HF 85 64 70	〃	4.7K 〃	〃	R01,02,03,04,05,14,24,28,32,33			
				35,40,87			
HF 85 71 00	〃	10K 〃	〃	R07,08,11,36,37,56,68			
HF 85 71 20	〃	12K 〃	〃	R20			
HF 85 72 20	〃	22K 〃	〃	R29,44,45,46,47,48,65,66			
				67,69,72,73,74,75,76,77			
				78,79,80,81,82,83,85,90			
				91,92,93,94,95,96			
HF 85 74 70	〃	47K 〃	〃	R16			

※ : New Parts

ランク: Japan only

	HL 50 46 80	〃	68 1/2W	〃		R34
	HL 50 48 20	〃	82 1/2W	〃		R31
	UJ 16 64 70	Electrolytic Cap	4.7/50	ケミコン		C01,02,12,13,14
	UJ 13 74 70	〃	47/16	〃		C26,71
	UJ 46 63 30	〃	3.3/50	〃		C31
	UJ 13 81 00	〃	100/16	〃		C23
	UJ 12 84 70	〃	470/10	〃		C15
	UK 14 64 70	NP Cap.	4.7/25	NPコンデンサ		C22
※	FA 15 31 50	Mylar Cap.	0.0015(K)	マイラーコン		C29
	FA 15 31 50	〃	0.0015(J)	〃		C27
	FA 15 42 20	〃	0.022 50V	〃		C32
	FS 68 51 00	Ceramic Cap.	0.1 25V	半導体セラコン		C03,04,05,06,07,08,09,
						16,17,18,19,20,21,25,28,
						33,34,35,36,37,38,39,40,
						41,42,43,46,47,48,49,
						50,51,52,53,54,55,56,
						57,58,59,60,61,62,63,64,
						66,68,69,70
	FG 71 31 00	Ceramic Cap.	1000P 25V	セラコン		C72
	UJ 13 82 20	Ultra Miniature Electrolytic Cap.	220μ 16V	超小型ケミコン		C65,67
	GE 30 03 50	Coil	68μH	チョークコイル		L01
	KC 00 13 50	Relay	AW-6219	リレー		RY1
	CB 55 28 10	Spacer		ジュラコンスペーサ		
※	LB 50 06 20	Connector	5P TCS5034-15-1111	DIN		VIDEO
※	LB 60 68 40	〃	50P M475-25-30-142	コネクタ		SLOT1
※	LB 60 76 80	〃	8P TCS5034-18-1111	DIN		CASSETTE
※	LB 60 76 90	〃	9P CA-M59	D-SUB		JOYSTICK 1/2
※	LB 60 68 70	〃	14P 57EL40140-770BD12	アンフェノール		PRINTER
※	LB 60 68 80	〃	HBR12S1J	ジャンパコネクタ		CN9,10
※	LB 60 24 90	〃	B8P-SHF-1AA	NHコネクタ		CN2
※	LB 30 07 30	〃	B3P-SHF-1AA	NHコネクタ		CN8
	FZ 00 60 90	EMI Filter	DS310-55B-271M	EMIフィルター		
	BD 06 18 00	Filter	B-20L-25	ビーズ		

※ : New Parts

ランク: Japan only

Ref. No.	Part No.	Description	品名	Remarks	ランク
	NA 55 17 10	***Key Sub Circuit Board***	キーサブシート		
	iG 00 17 40	IC	TC4050BP	IC	IC1,2
	HJ 35 62 20	Carbon Resistor	2.2K 1/4W	カーボン抵抗	R1～8
	FS 68 51 00	Ceramic Cap	0.1 25V	セラコン	C1,2
	LB 60 77 00	Connector	9P	コネクタ	
	LB 60 77 10	〃	14P	〃	
	LB 60 77 20	〃		〃	

※ : New Parts

ランク: Japan only

Ref. No.	Part No.	Description	品名	Remarks	ランク
※	***NA 55 17 30***	***U-Clock Card***	Uクロックカード		
	iC 18 15 10	Transistor	2 SC 1815	トランジスタ	TR1
	FG 41 11 00	Ceramic Cap	10P 50V	セラコン	C1
	FG 41 13 00	〃	33P 50V	〃	C2
	FG 41 23 30	〃	330P 50V	〃	C5
	FY 00 02 70	Trim	TZ03R300FR		TC1
	FS 68 51 00	Ceramic Cap	0.1 25V	セラコン	C4
	QU 00 62 00	Quartz Crystal Unit	10.73863MHz	水晶発振ユニット	X1

※ : New Parts

ランク: Japan only

● **Exploded View**

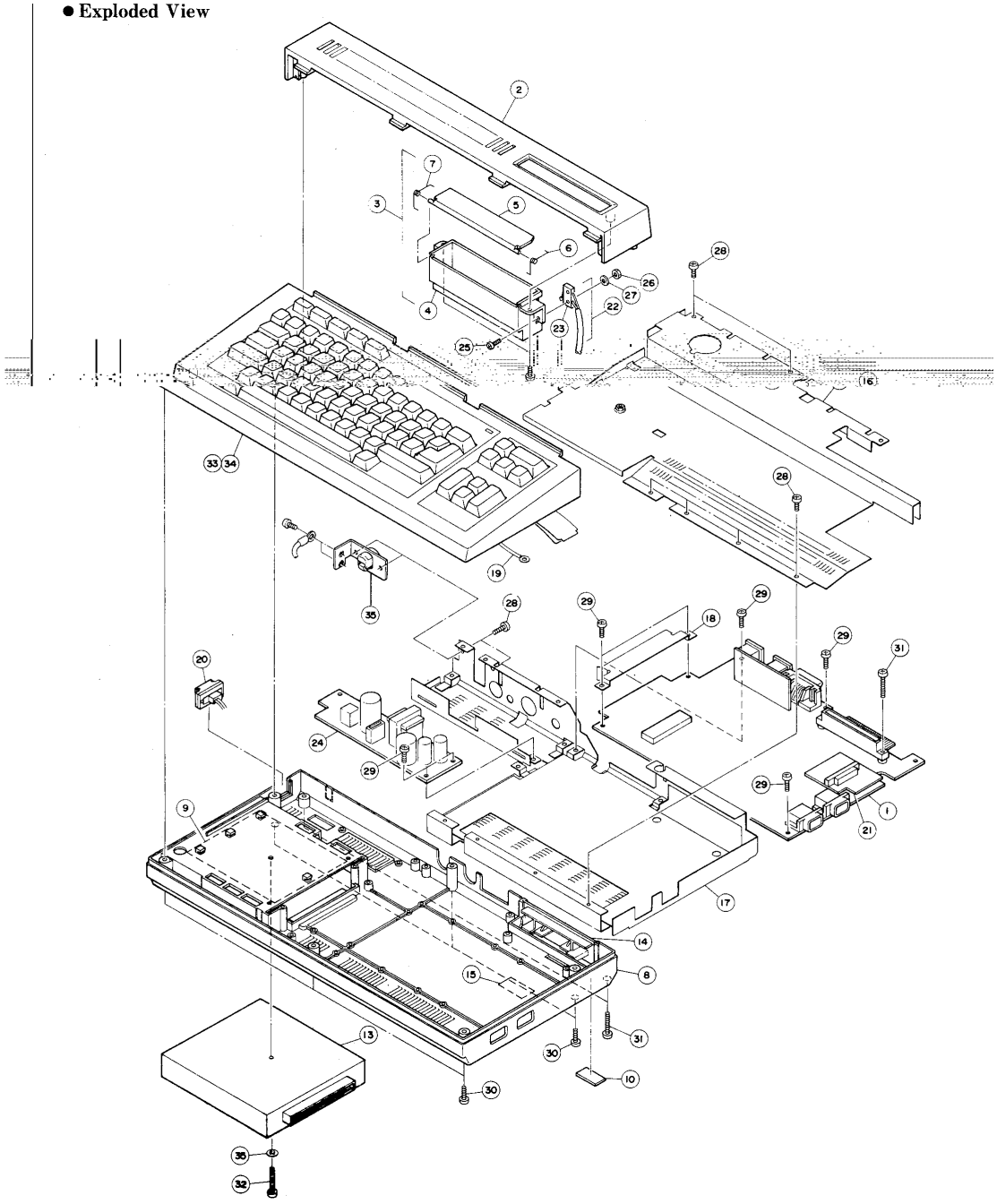

	Ref. No.	Part No.	Description		品名	Remarks	ランク
※	1	NA 55 16 70	CPU Circuit Board	ROM 32KB #9918	MSX CPU シート		
※	2	CB 55 36 50	Rear Case		リアーケース		
※	3	NB 55 18 70	Upper Slot Assembly		アッパースロット Ass'y		
	4	CB 55 38 10	Upper Slot		アッパースロット		
	5	CB 55 38 20	Upper Slot Door		アッパースロットドア		
	6	AA 55 32 40	Upper Slot Door Spring	Right	アッパースロットドアバネ (右)		
	7	AA 55 32 50	〃	Left	〃 (左)		
※	8	NB 55 18 80	Bottom Case		下ケース		
※	9	CB 55 39 50	Side Slot Shield	PET12μ	サイドスロットシールド板		
	10	CC 03 61 30	Foot		脚		
※	11	CA 55 16 10	Spacer		スペーサ		
※	13	NB 55 19 50	FM Sound Synthesizer Unit		FMサウンドユニット	See page 44	
	14	CB 55 37 30	Rear Slot Cover		リアースロットカバー		
※	15	CB 55 36 30	Name Plate	0.05t POLYFILM	銘板		
※	16	NB 55 16 90	Top Shield Cover		シールドケーストップ Ass'y		
※	17	AA 55 36 40	Bottom Shield Cover		シールドケースボトム		
※	18	AA 55 36 60	Grounding Bracket		サイドスロットアース		
※	19	MZ 55 12 80	Grounding Terminal Ass'y		キーボードアース Ass'y		
	20	KA 10 12 20	Switch	SDJ1A-A	パワースイッチ		
※	21	NA 55 17 10	Key Sub Board Assembly		キーサブシート		
※	22	NB 55 27 20	Micro Switch Assembly		マイクロSW Ass'y		
	23	KA 60 06 80	Micro Switch	D2MSL13-C	マイクロSW		
※	24	NP 55 12 00	Power Supply Unit		電源ユニット	See page 42	
		LB 30 07 30	Connector Housing	H3P-SHF-AA	コネクターハウジング		
		BB 00 44 30	〃	SHF-0.01T-0.8CS	〃		
※	25	ED 02 01 26	Bind Head Screw	2×12	バインド小ネジ		
※	26	EV 10 00 26	Hexagonal Nut	M2	六角ナット		
※	27	EV 20 02 06	Flat Washer	M2	ワッシャー		
※	28	Ei 03 00 66	Bind Head Tapping Screw	3×6	バインドタッピンネジ		
※	29	Ei 03 00 86	〃	3×8	〃		
※	30	Ei 13 01 06	〃	3×10	〃		
※	31	EJ 03 01 80	Pan Head Tapping Screw	3×18	ナベタッピンネジ		
※	32	EX 55 00 10	Screw	3×30 (Black)	小ネジ		
※	33	Ei 04 00 60	Bind Head Tapping Screw	4×6	バインドタッピンネジ		
※	34	Ei 41 00 30	〃	4×8	〃		
	35	AA 55 37 40	Power Cord Stopper Holder		ストッパーホルダー		
		Mi 55 11 60	CMT Cable		CMT ケーブル		

※ : New Parts

ランク: Japan only

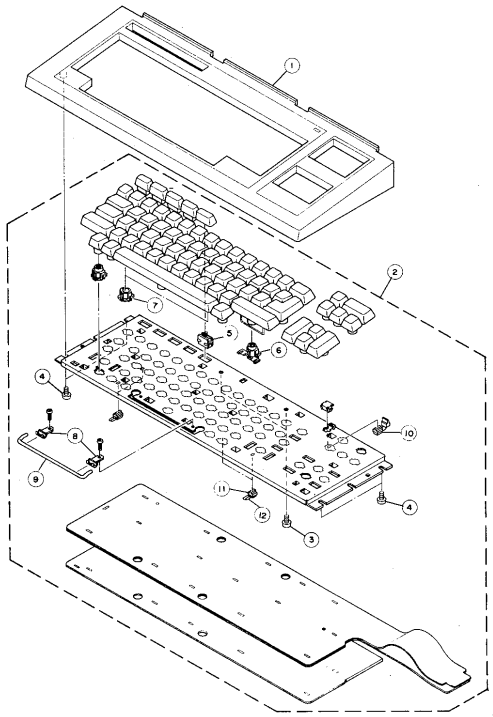

Part No.		Description		品 名	Remarks	ランク	Ref. No.
CB 55 37 20	Upper Case		上 ケ ー ス				1
PB 55 07 30	Keyboard		キ ー ボ ー ド				2
Ei 04 00 60	Bind Head Tapping Screw	4×6	バインドタッピンネジ				3
Ei 04 00 80	〃	4×8	〃				4
KX 55 03 40	Key Switch Assembly	F1~F5 Keys	キースイッチ Ass'y				5
KX 55 03 50	〃	SHIFT,RETURN	〃				6
KX 55 03 60	〃	CURSOR(L,R)	〃				
KX 55 03 70	〃	STOP	〃				
KX 55 02 80	Switch Guide	[illegible]	[illegible]				
Space Bar Plate			スペースバープレート				8
[illegible]	AX 55 00 40	Space Bar Rim		スペースバーアーム			
10	iX 55 16 40	LED	Power	L E D			
	iF 00 17 20	〃	CAPS	〃			
11	CX 55 60 00	Rubber		ゴ ム (ダイオード用)			
12	iF 00 34 50	Diode	ISS133	ダ イ オ ー ド			

※ : New Parts

ランク: Japan only

● Keytops

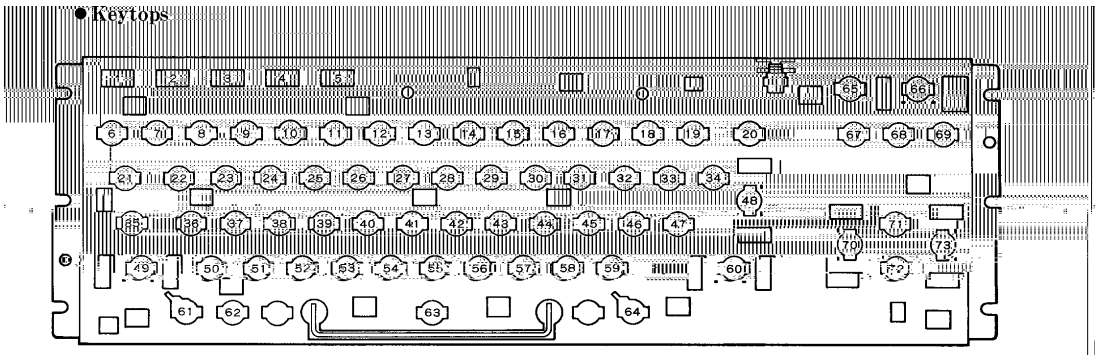

Ref. No.	Part No.	Description	品名	Remarks	ランク
	CX5MU				
1	CX 55 37 50	Keytop	F1/F6		
2	CX 55 37 60	〃	F2/F7		
3	CX 55 37 70	〃	F3/F8		
4	CX 55 37 80	〃	F4/F9		
5	CX 55 37 90	〃	F5/F10		
6	CX 55 38 00	〃	ESC		
7	CX 55 38 10	〃	1		
8	CX 55 38 20	〃	2		
9	CX 55 38 30	〃	3		
10	CX 55 38 40	〃	4		
11	CX 55 38 50	〃	5		
12	CX 55 38 60	〃	6		
13	CX 55 38 70	〃	7		
14	CX 55 38 80	〃	8		
15	CX 55 38 90	〃	9		
16	CX 55 39 00	〃	0		
17	CX 55 39 10	〃	−		
18	CX 55 39 20	〃	= +		
19	CX 55 39 30	〃	\ :		
20	CX 55 39 40	〃	BS		
21	CX 55 39 50	〃	TAB		
22	CX 55 39 60	〃	Q		
23	CX 55 39 70	〃	W		
24	CX 55 39 80	〃	F		
25	CX 55 39 90	〃	R		
26	CX 55 40 00	〃	T		
27	CX 55 40 10	〃	Y		
28	CX 55 40 20	〃	U		
29	CX 55 40 30	〃	I		
30	CX 55 40 40	〃	O		
31	CX 55 40 50	〃	P		
32	CX 55 40 60	〃	[		
33	CX 55 40 70	〃	]		
34	CX 55 40 80	〃	(DEAD)		
35	CX 55 40 90	〃	CTRL		

※ : New Parts

ランク: Japan only

Description 品名	Remarks	ランク	Ref. No.	Part No.	
				CX-5M	
A			36	CX 55 41 00	Keytop
S			37	CX 55 41 10	〃
D			38	CX 55 41 20	〃
F			39	CX 55 41 30	〃
G			40	CX 55 41 40	〃
H			41	CX 55 41 50	〃
J			42	CX 55 41 60	〃
K			43	CX 55 41 70	〃
L			44	CX 55 41 80	〃
;			45	CX 55 41 90	〃
:			46	CX 55 42 00	〃
]			47	CX 55 42 10	〃
(RETURN)			48	CX 55 42 30	〃
SHIFT			49	CX 55 42 40	〃
Z			50	CX 55 42 50	〃
X			51	CX 55 42 60	〃
C					
V			53	CX	
B			54	CX	
N			55	CX	
M			56	CX	
,			57	CX	
.			58	CX	
/			59	CX	
SHIFT (Long)			60	CX	
CAPS			61	CX	
GRAPH			62	CX	
(SPACE)			63	CX	
CODE			64	CX	
SELECT			65	CX	
STOP			66	CX	
CLS HOME			67	CX	
INS			68	CX	
DEL			69 =	CX	
← → (Large)			70,73	CX 55 44 50	〃
↑ ↓ (short)			71,72	CX 55 44 60	〃

※ : New Parts

ランク: Japan only

Power Supply Unit

	Ref. No.	Part No.	Description		品名	Remarks	ランク
		NP 55 12 00	***Power Supply Unit***		電源ユニット		
※		HX 55 13 00	Fuse Resistor L53D-6R8JF	6.8 2A/125V 5W	フューズ抵抗	R01	
		HL 32 46 80	Metal Oxide Resistor	68 2W	金属皮膜抵抗	R03	
		HJ 35 52 20	Carbon Resistor	220 1/4W	カーボン抵抗	R04	
		HL 31 45 60	Metal Oxide Resistor	56 1W	金属皮膜抵抗	R05	
		HJ 35 43 30	Carbon Resistor	33 1/4W	カーボン抵抗	R06	
		HJ 35 61 20	〃	1.2K 1/4W	〃	R07	
		HM 55 31 00	Cement Molded Resistor	1 5W	セメント抵抗	R08	
		HL 35 56 80	Metal Oxide Resistor	680 3W	金属皮膜抵抗	R09,16	
		HJ 35 63 90	Carbon Resistor	3.9K 1/4W	カーボン抵抗	R10	
		HJ 35 51 00	〃	100 1/4W	〃	R11	
		HJ 35 61 50	〃	1.5K 1/4W	〃	R12	
		HJ 35 61 80	〃	1.8K 1/4W	〃	R13	
		HL 30 55 60	〃	560 1/2W	〃	R14	
		HJ 35 53 30	〃	330 1/4W	〃	R15	
		FZ 00 43 30	Metalized Cap. ECQ-U1A104MH	0.1μF 125V	金属皮膜コンデンサ	C01	
		FX 55 11 30	Electrolytic Cap. UHU2D151MRAAMP	150μF 200V	ケミカルコンデンサ	C03	
		UA 15 41 50	Mylar Cap. ECQ-V1H153JZ	0.015μF 50V	マイラーコンデンサ	C04	
		UJ 16 61 00	Electrolytic Cap. UPC1H010MAH	1μF 50V	ケミカルコンデンサ	C05	
※		FX 55 11 40	Ceramic Cap. DE0705B102K	1000pF DC1kV	セラミックコンデンサ	C07	
		UJ 13 91 00	Electrolytic Cap. UPC1C102MRH	1000μF 16V	ケミカルコンデンサ	C08,10	
		UJ 13 84 70	〃 UPC1C471MRH	470μF 16V	〃	C09,12	
		UJ 12 92 20	〃 UPX1A222MRH	2200μF 10V	〃	C11	
		FG 24 51 00	Ceramic Cap. ECQ-V1H104JZ	0.1μF 50V	セラミックコンデンサ	C13	
		FG 71 32 20	〃 DE7100F222MVA1K	0.22μF 50V	〃	C14,15	
		FA 15 52 20	Mylar Cap. ECQ-V1H224JZ	0.22μF 50V	マイラーコンデンサ	C16	
※		iX 55 29 40	Transistor	2SC2655	トランジスタ	Q01	
※		iX 55 29 50	〃	2SC2555	〃	Q02	
		iC 99 02 00	〃	2SC2634	〃	Q03	
※		iX 55 29 20	Diode	DF04M	ダイオード	D01	
		iX 55 15 80	〃	ERB4406	〃	D02	
		iF 00 13 80	〃	1SS84	〃	D03	
		iX 55 16 00	〃	ERB4302	〃	D04,05,09	
※		iX 55 17 20	〃	30DF2	〃	D06,07	
※		iX 55 29 30	〃	C8P04Q	〃	D08	
		iF 00 14 70	Zener Diode	RD6.2EB2	ツェナーダイオード	ZD01	
※		GX 55 03 70	Coil PLA8021A	8MH 0.5A	コイル	L01	
		GX 55 00 90	〃 FL9H151K-30	150μH 0.5A	〃	L02	
		GX 55 01 00	〃 FL11Z180K-60	18μH 2.8A	〃	L03	
※		HX 55 13 10	Variable Resistor RVF8P-B	1K	可変抵抗	VR01	
※		GX 55 03 80	Transformer HC-J1(TM135)		トランス	T01	
		iX 55 16 30	Photocoupler PC817		フォトカプラー	PC01	
		KB 00 03 40	Fuse		フューズ	F01	
		KA 10 12 20	Power Switch SDJ1S-A	1.5A 125V	パワースイッチ	SW01	
		KA 60 06 80	Micro Switch D2MSL13C		マイクロスイッチ	SW02	

※ : New Parts

ランク: Japan only

Description	品名	Remarks	ランク
YG-4012-007	ＡＣケーブルAss'y		
	ＡＣケーブルストッパー		
YG-4012-005	ストッパーホルダー		
YG-4012-013	ＤＣケーブル	8Lines	
DPS-15 A=30	放熱板	for D08	
YG-4012-021	〃	for Q02	
D2MSL13-C	マイクロスイッチ		
	パワースイッチ		
B-20L-48B	フェライトビーズ		
	サーコン	for Q02	
	〃	for D08	
SHF-001T-08P	コンタクトピン	CN1,6	
H3P-SHF-AA	コネクタハウジング	CN1	
SCN-001T-10	ピン	CN2	
2P-SCN	コネクタ	CN2,3,4	
8P-SCN	〃	CN5	
H8P-SHF-AA	コネクタハウジング	CN6	
M4×4	ナベ小ネジ		
M3×8	バインド小ネジ		
M3×10	〃		
M3	六角ナット		
4M	平座金		

	Ref. No.	Part No.	
※		MX 55 01 30	Power Cord Assembly
※		CB 81 12 30	Power Cord Stopper
※		AX 55 00 70	Power Cord Stopper Holder
※		MX 55 01 40	DC Flat Cable
※		BX 55 00 40	Heat Sink MTO-15
※		BX 55 00 60	〃
※		KA 60 06 80	Micro Switch
※		KA 10 12 20	Power Switch
※		BX 55 00 70	Ferrite Bead
※		CX 55 00 10	Insulator
		CX 55 00 10	〃
		BB 00 44 30	Contact Pin
		LB 30 07 20	Connector Housing
※		LA 00 49 80	Pin (Board in Type)
		LA 00 50 00	Connector
		LA 00 50 60	〃
		LB 60 24 80	Connector Housing
		EA 04 00 46	Pan Head Screw
		ED 03 00 86	Bind Head Screw
		ED 03 01 06	〃
		EV 10 00 36	Hexagonal Nut
		EV 20 00 46	Washer

※ : New Parts

ランク: Japan only

● **FM Sound Synthesizer Unit**

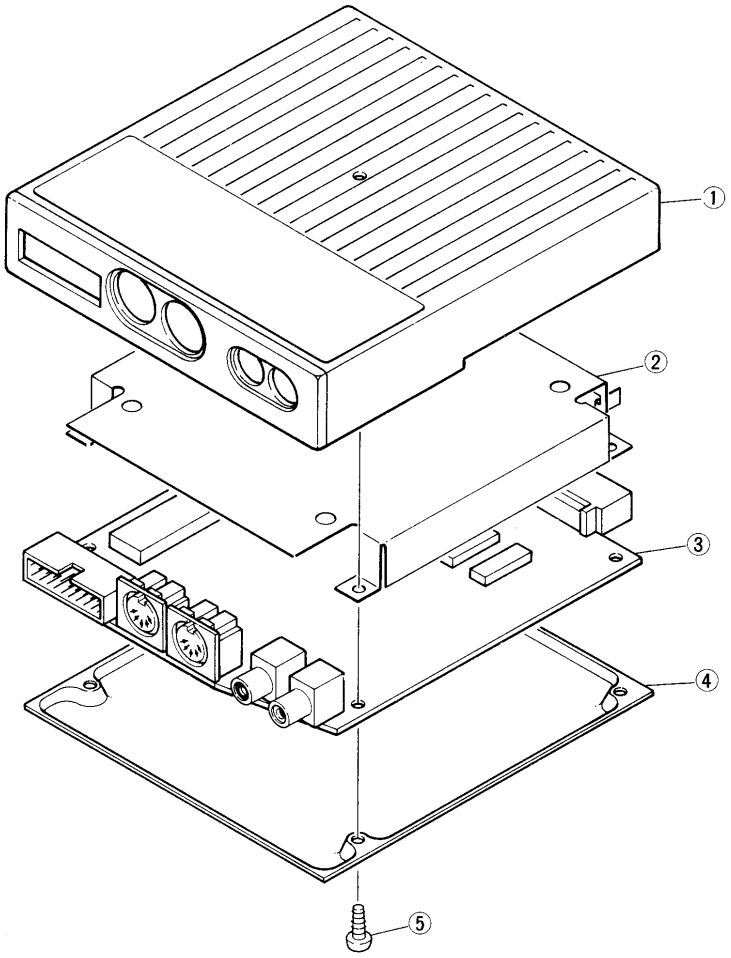

	Ref. No.	Part No.	Description		名	Remarks
※	1	CB 55 39 10	Upper Case	Metallic	上 ケ ー ス	
※	2	AA 55 32 30	Shield		シ ー ル ド 板	
※	3	NA 55 16 30	FM Circuit Board		FM-EX シ ー ト	
	4	AA 55 32 20	Lower Case		下 ケ ー ス	
	5	EJ 33 00 86	Pan Head Tapping Screw	3×12	ナベタッピンネジ	
		CB 55 30 80	MKC Cover		M K C カ バ ー	
※		CB 55 39 80	CAUTION Label		注 意 書	
※		CB 55 40 00	Label		ラ ベ ル	

※ : New Parts

Electronic Components

Description	品名	Remarks		Ref No	Part No	
	FM音源シート		※		NA 55 16 30	FM Circuit Board
IT 21 51 00	IC	TM2151	[illegible]	IC101	(OPM)	※
IT 30 12 00	〃	YM3012	〃	IC102	(DAC)	※
IT 21 48 00	〃	YM2148	〃	IC103	(MKS)	※
IT 22 70 20	〃	YM22702	〃	IC104	(128KROM)	※
IG 04 97 50	〃	SN74LS30	〃	IC105		※
IG 09 06 00	〃	SN74LS03	〃	IC106		
IG 04 98 50	〃	SN74LS32	〃	IC107		※
IG 02 70 20	〃	SN74LS04	〃	IC108		※
IK 00 04 70	〃	TLP552	〃	IC109		
IG 07 74 00	〃	NJM4556S	〃	IC110,111		※
IG 07 68 00	〃	NJM4558S	〃	IC112		※
IG 07 13 00	〃	SN74LS107A	〃	IC113		
IC 07 52 20	Transistor	2SC752Y	トランジスタ	Tr101		
IC 18 15 50	〃	2SC1815Y,GR	〃	Tr102		
IA 10 15 80	〃	2SA1015O,Y	〃	Tr103		
ID 06 55 00	〃	2SD655D,E,F	〃	Tr104~106		
IF 00 34 50	Diode	1SS133	ダイオード	D1~3		

カーボン抵抗	R4,5	HJ 35 52 20	Carbon Resistor R28FSL	1/4W	220Ω
〃	R1~3,9~12,14,34	HF 85 64 70	〃 RD16ST52	1/6W	4.7KΩ
〃	R6,7,13,15	HF 85 71 00	〃 〃	1/6W	10KΩ
〃	R8	HF 85 91 00	〃 〃	1/6W	1MΩ
〃	R16,20	HF 85 55 60	〃 〃	1/6W	560Ω
〃	R17,19,30,32.33	HF 85 52 20	〃 〃	1/6W	220Ω
〃	R18,22,24	HF 85 61 80	〃 〃	1/6W	1.8KΩ
〃	R21,23,25	HF 85 62 20	〃 〃	1/6W	2.2KΩ
〃	R26,27	HF 85 61 00	〃 〃	1/6W	1KΩ
〃	R31	HF 85 52 70	〃 〃	1/6W	270Ω
〃	R35,36	HF 85 72 20	〃 〃	1/6W	22KΩ
〃	R37	HF 85 53 90	〃 〃	1/6W	390Ω
		HF 85 53 30	〃 〃	1/6W	330Ω
半導体セラコン	C1,2,4~7,9	FS 68 51 00	Ceramic Cap.		0.1 25V
小型ケミコン	C3,13,28	UJ 13 74 70	Electrolytic Cap.		47/16
〃	C10,11	UJ 13 81 00	〃		100/16
〃	C12,26	UJ 13 71 00	〃		10/16
セラコン	C14,15	FG 21 23 90	Ceramic Cap.		390P
小型ケミコン	C16~19,22,24	UJ 14 64 70	Electrolytic Cap.		4.7/25
マイラーコン	C20	FA 15 42 70	Mylar Cap.		0.027
〃	C21,23	FA 15 31 80	〃		0.0018
〃	C25,27	FA 15 31 00	〃		0.001
	CA1,CA2	FZ 00 66 80	C-ARY		100p×8
固定コイル	L1 ※	GE 90 09 60	Coil		820μH
水晶発振子	X1	QU 00 05 00	Quartz Oscillator		4MHz
フェライトビーズ	L2,3,4,5,6	GE 30 06 70	Ferrite Bead		BL02RN2-R62-T2
スイッチ付ピンジャック(白)	JK101 ※	LB 20 27 20	Jack, Pin(with Switch)		(White)
〃 (赤)	JK102 ※	LB 20 27 30	〃, Pin(with Switch)		(Red)
5P DIN ジャック	JK103,104 ※	LB 50 06 50	〃, DIN-5P		

※	LB 60 68 30	Connector	60P	コネクタ	CN1
	LB 60 54 30	〃	20P	コネクタ	CN2

※ : New Parts